CONTRACT No. R-17483

BRIDGES OVER 20' SPAN					
FEDERAL REGION NO.	STATE	PROJECT NO.	FISCAL YEAR	SHEET NO.	TOTAL SHEETS
5	IND.		198	1	51

INDEX

PROJECT	STRUCTURE	TYPE	SPAN	OVER	STATION
MAF-170-1(25)	1-02-6950	COMPOSITE BUILT-UP PLATE GIRDER	2 @ 94'-0 SQUARE	U.S. 24	842+20.88 LINE "PR-1"

SHEET NO	SHEET DESIGNATION	SUBJECT	F.H.W.A. APPROVAL
1		TITLE AND INDEX	
~~2~~	~~ROAD PLANS SHEET 6~~	~~TYPICAL APPROACH SECTION S.R.1 LINE "PR-1"~~ DELETED	
~~3~~	~~ROAD PLANS SHEET 3~~	~~TYPICAL APPROACH SECTION U.S. 24 LINE "A"~~ DELETED	
~~4~~	~~ROAD PLANS SHEET 17~~	~~ROAD PLAN AND PROFILE S.R.1 LINES "S-SR1-A" AND "PR-1"~~ DELETED	
~~5~~	~~ROAD PLANS SHEET 13~~	~~ROAD PLAN AND PROFILE U.S. 24 LINE "A"~~ DELETED	
6		SOIL BORINGS	
7	S1	LAYOUT	
8	S2	(NOT USED)	
9-10	S3-S4	GENERAL PLAN	
11-12	S5-S6	BENTS NO.1 AND NO.3 DETAILS	
13	S7	BENT NO.2 DETAILS	
14-16	S8-S10	STRUCTURAL STEEL DETAILS	
17	S11	CORNER DETAIL	
18-19	S12-S13	FLOOR DETAILS	
20-21	S14-S15	SCREED ELEVATIONS	
22		BRIDGE SUMMARY	
23		BRIDGE ESTIMATE OF QUANTITIES	
~~24-31~~	~~ROAD PLANS SHEETS~~		
	~~95,96,126,127,128,135,136 & 137~~	~~CROSS SECTIONS~~ DELETED	
~~5A~~	~~ROAD PLANS SHEET 23~~	~~INTERCHANGE GEOMETRICS~~ DELETED	
~~5B~~	~~ROAD PLANS SHEET 25~~	~~INTERCHANGE DRAINAGE~~ DELETED	
~~5C~~	~~ROAD PLANS SHEET 22~~	~~RAMP INTERSECTION DETAILS~~ DELETED	

~~(1) ROAD PROJECT No. F-170-1 (15)~~

R 1

17483

5 OF 5

TRAFFIC DATA	U.S. 24	S.R. 1
A.D.T. (1988)	2010 V.P.D.	5182 V.P.D.
A.D.T. (2008 PROJECTED)	2764 V.P.D.	7125 V.P.D.
D.H.V. (2008 PROJECTED)	249 V.P.D.	641 V.P.D.
TRUCKS	D.H.V. 9% A.D.T. 15%	D.H.V. 3% A.D.T. 5%
DESIGN SPEED	70 M.P.H.	55 M.P.H.
ACCESS CONTROL	LIMITED	NONE

INDIANA DEPARTMENT OF HIGHWAYS

BRIDGE PLANS

FOR SPANS OVER 20 FEET ON STATE ROAD NO. 1

PROJECT MAF-170-1

( )PE
(2)R/W
(25)CONSTR.

BEGINNING AT A POINT APPROXIMATELY 245.02 FT NORTH AND 100.00 FT. EAST OF THE WEST 1/4 CORNER OF SECTION 22 AND EXTENDING IN A NORTHERLY DIRECTION A DISTANCE OF 725.00 FT. TO A POINT APPROXIMATELY 970.02 FT. NORTH AND 45.00 FT. EAST OF THE WEST 1/4 CORNER OF SECTION 22, ALL BEING IN SECTION 22, T29N, R12E, PLEASANT TWP., ALLEN CO., INDIANA.

BRIDGE	LENGTH:	0.036 MI.
ROADWAY	LENGTH:	0.101 MI.
TOTAL	LENGTH:	0.137 MI.
MAX.	GRADE :	2.50 %

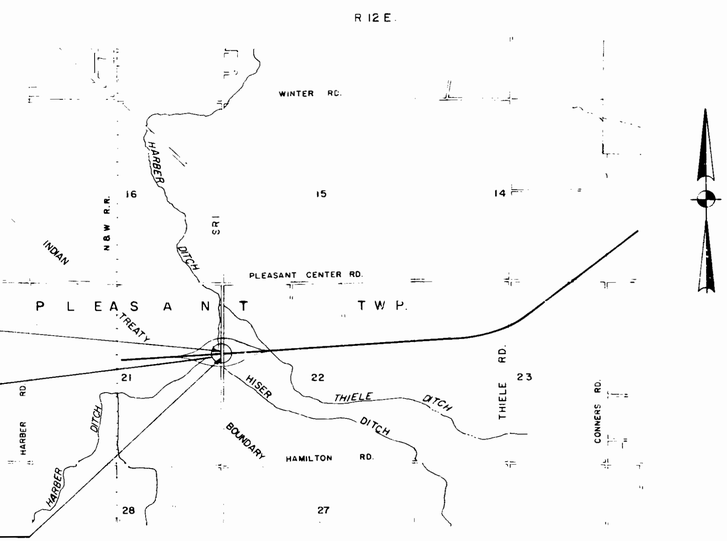

END PROJECT:
STA. 845+85 "PR-1"

BRIDGE FILE: 1-02-6950
COMPOSITE BUILT-UP
PLATE GIRDER BRIDGE
2 SPANS @ 94'-0, SQUARE
CLEAR ROADWAY VARIES
STA. 842+20.88 "PR-1"

BEGIN PROJECT:
STA. 838+60 "PR-1"

ALLEN COUNTY
SCALE: 1" = 2000'

BUTLER, FAIRMAN & SEUFERT, INC.
ENGINEERS
CARMEL, INDIANA

F-170-1() APPEARS
CONTRACT
MAF-170-1(25)

~~INDEX~~ ~~CONTINUED~~				
~~STANDARD~~ ~~DRAWINGS~~				
SHEET NO.	SHEET DESIGNATION	SUBJECT	F.H.W.A. APPROVAL	ADOPTED & REVISION
	BRIDGE STD. BR1	ALUMINUM BRIDGE RAILING		
	BRIDGE STD. BR2	ALUMINUM BRIDGE RAILING DETAILS		
	BRIDGE STD. BR3	STEEL BRIDGE RAILING		
	BRIDGE STD. BR4	STEEL BRIDGE RAILING DETAILS		
~~32~~	BRIDGE STD. BR5	RAILING CONNECTION DETAILS	USE ~~6~~	R 12-3-84
	BRIDGE STD. BR6	RAILING CONNECTION DETAILS		
~~33~~	BRIDGE STD. C1	MISCELLANEOUS DETAILS	2-3-87	R 2-2-87
	BRIDGE STD. C2	MISCELLANEOUS DETAILS		
~~34~~	BRIDGE STD. C3	MISCELLANEOUS DETAILS		R 11-2-87
~~35~~	BRIDGE STD. C4	MISCELLANEOUS DETAILS	12-4-74	R. 10-29-74
~~36~~	BRIDGE STD. D	CASTING DETAILS ROADWAY DRAINS	1-22-87	R 12-1-86
	BRIDGE STD.			
	BRIDGE STD.			
	BRIDGE STD. PB	PRESTRESSED CONCRETE TYPE I-BEAMS		
	BRIDGE STD. PB	PRESTRESSED CONCRETE TYPE I-BEAMS		
	BRIDGE STD. PB6	PRESTRESSED BOX BEAMS		
	BRIDGE STD. PB	PRESTRESSED COMPOSITE BOX BEAMS WIDE		
	BRIDGE STD. PB	PRESTRESSED COMPOSITE BOX BEAMS WIDE		
	BRIDGE STD. PB10	TOLERANCES FOR FABRICATION OF PRESTRESSED BEAMS		
	BRIDGE STD. PB11	ELASTOMERIC BEARING PAD DETAILS		
	BRIDGE STD.			
	BRIDGE STD.			
	BRIDGE STD. R2A	BRIDGE LIGHTING DETAILS		
	BRIDGE STD. R2B			
	BRIDGE STD. S1	MISCELLANEOUS DETAILS		
	BRIDGE STD. SH1	STEEL SHOE DETAILS		
	BRIDGE STD. T SHEET A	STANDARD TEMPORARY BRIDGE		
	BRIDGE STD. T SHEET B	STANDARD TEMPORARY BRIDGE		
	BRIDGE STD.			
	BRIDGE STD.			
	BRIDGE STD.			
	BRIDGE STD.			
	BRIDGE STD.			
	ROAD STD. SHEET A	STANDARD PAVEMENT JOINTS		
	ROAD STD. SHEET B	STANDARD PAVEMENT JOINTS		
	ROAD STD. SHEET MA	MISCELLANEOUS STANDARDS		
~~37~~	ROAD STD. SHEET MA	MISCELLANEOUS STANDARDS	10-23-87	R 8-3-87
	ROAD STD. SHEET MB	MISCELLANEOUS STANDARDS		
~~38~~	ROAD STD. SHEET MB2	MISCELLANEOUS STANDARDS	5-21-82	R. 4-1-82
~~39~~	ROAD STD. SHEET MB4	MISCELLANEOUS STANDARDS	6-14-74	R. 1-2-74
~~40~~	ROAD STD. SHEET MC	MISCELLANEOUS STANDARDS	5-5-87	R 4-1-87
	ROAD STD. SHEET MC1	MISCELLANEOUS STANDARDS		
~~41~~	ROAD STD. SHEET MD	MISCELLANEOUS STANDARDS	12-27-82	R. 10-1-82
	ROAD STD. SHEET MD	MISCELLANEOUS STANDARDS		
	ROAD STD. SHEET MD	MISCELLANEOUS STANDARDS		
	ROAD STD. SHEET ME	MISCELLANEOUS STANDARDS		
~~42~~	ROAD STD. SHEET ME 2	MISCELLANEOUS STANDARDS	6-27-85	R 9-4-84
	ROAD STD. SHEET	MISCELLANEOUS STANDARDS		
	ROAD STD. SHEET MH	MISCELLANEOUS STANDARDS		
	ROAD STD. SHEET MH	MISCELLANEOUS STANDARDS		
	ROAD STD. SHEET MI	MISCELLANEOUS STANDARDS		
	ROAD STD. SHEET	MISCELLANEOUS STANDARDS		
~~43~~	ROAD STD. SHEET MT1	MISCELLANEOUS STANDARDS	6-4-84	R. 4-2-84
~~44~~	ROAD STD. SHEET MT3	MISCELLANEOUS STANDARDS	8-30-82	A JUL. 1982
	ROAD STD. SHEET	MISCELLANEOUS STANDARDS		
~~45~~	ROAD STD. SHEET MP	MISCELLANEOUS STANDARDS	9-24-85	6-3-85
	ROAD STD. SHEET	MISCELLANEOUS STANDARDS		
	ROAD STD. SHEET MO	MISCELLANEOUS STANDARDS		
	ROAD STD. SHEET MR	MISCELLANEOUS STANDARDS		
	ROAD STD. SHEET			
	ROAD STD.	STANDARD REINF. CONCRETE BOX CULVERTS		
	ROAD STD.	STANDARD REINF. CONCRETE CULVERTS		
	ROAD STD. SHEET GR	GUARD RAIL CLASS		
	ROAD STD. SHEET GR	GUARD RAIL CLASS		
	ROAD STD. SHEET GR	GUARD RAIL CLASS		
	ROAD STD. SHEET GR5	ALUMINUM GUARD RAIL DETAILS		
	ROAD STD. SHEET GR6	STEEL TUBE GUARD RAIL DETAILS		
	ROAD STD. SHEET GR			
	ROAD STD. SHEET GR10	GUARD RAIL BURIED ENDS		
	ROAD STD.			
	ROAD STD. SHEET 0	TRAFFIC SIGN DETAILS		
	ROAD STD. SHEET 1 DETOURS	STANDARD DETOUR SIGNS		
	ROAD STD. SHEET 1A DETOURS	STANDARD DETOUR SIGNS		
	ROAD STD. SHEET 1B DETOURS	STANDARD DETOUR SIGNS		
~~46~~	ROAD STD. SHEET 2 DETOURS	STANDARD DETOUR SIGNS		R 2-1-85
~~47~~	ROAD STD. SHEET 2A DETOURS	STANDARD DETOUR SIGNS		R 2-1-85
~~48~~	ROAD STD. SHEET 3 DETOURS	STANDARD DETOUR SIGNS	4-10-84	R 2-1-84
~~49~~	ROAD STD. SHEET 3A DETOURS	STANDARD DETOUR SIGNS	12-8-83	R 10-3-83
~~50~~	ROAD STD. SHEET 4 DETOURS	STANDARD DETOUR SIGNS	12-8-83	R 10-3-83
~~51~~	ROAD STD. SHEET 5 DETOURS	STANDARD DETOUR SIGNS	4-10-84	R 2-1-84
	ROAD STD. SHEET 5A DETOURS	STANDARD DETOUR SIGNS		

DATE: March 5, 1990

APPROVED

CHIEF HIGHWAY ENGINEER

RECOMMENDED FOR APPROVAL

ENGINEER OF BRIDGE DESIGN

FEDERAL HIGHWAY ADMINISTRATION
DEPARTMENT OF TRANSPORTATION
APPROVED:

DIVISION ADMINISTRATOR | DATE

BRIDGE FILE: 1-02-6950

INDIANA DEPARTMENT OF HIGHWAYS
STANDARD SPECIFICATIONS DATED 1985
TO BE USED WITH THESE PLANS.

REVISIONS	
DATE	SHEET NO.
12-15-87	1 thru 7, 9, 10, 12, 13, 14, 17, 19, 22 thru 31 and Up-Dated Standards
2-25-88	1, 15, 23
3-15-88	1 Rev.; 2, 3, 4, 5, 5A, 5B, 5C, 24 Thru 31, 32 Thru 51 Deleted

REVISIONS	
DATE	SHEET NO.

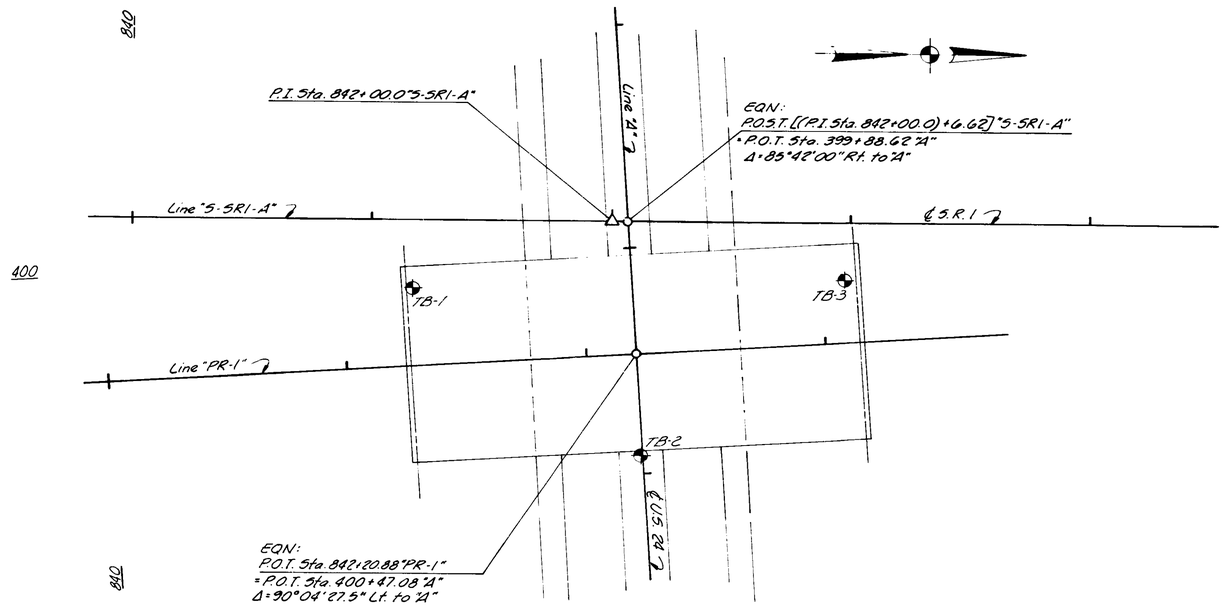

PLAN
Scale: 1" = 30'-0

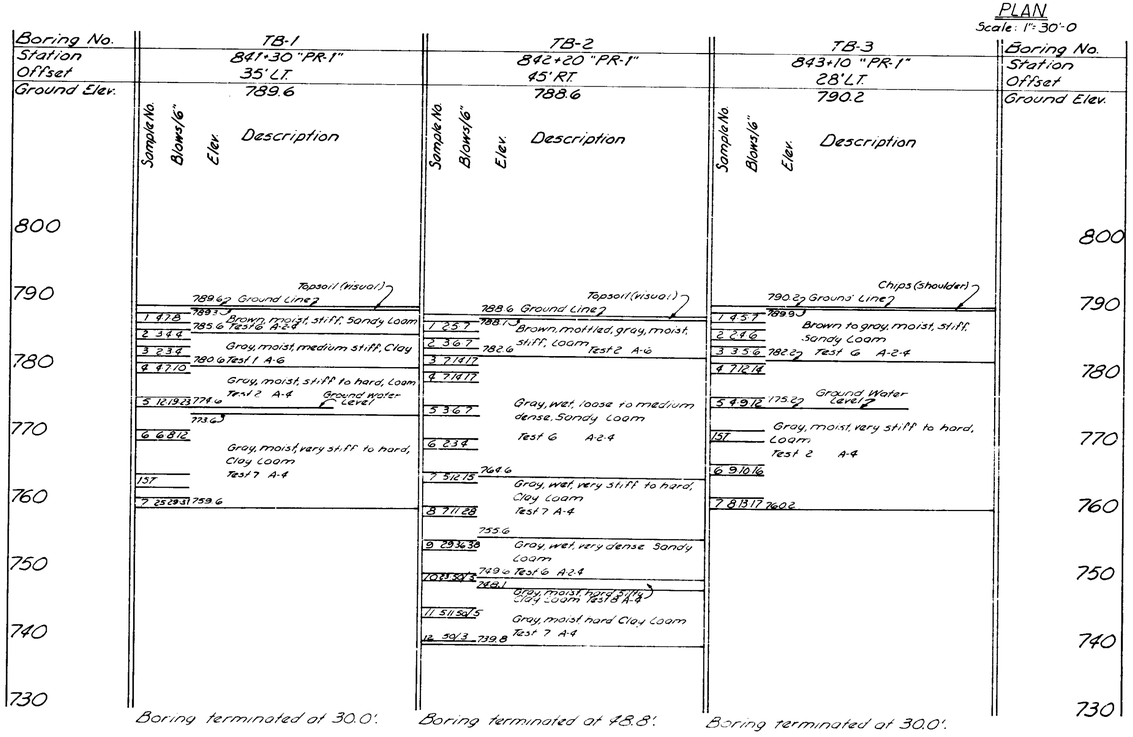

Standard Penetration Test:
Driving 2" O.D. Sampler 1'-0 with a 140# Hammer falling 30".
Count made at 6" intervals. First 6" for setting sampler.

SOIL BORINGS

INDIANA DEPARTMENT OF HIGHWAYS

ALLEN COUNTY

SCALE:- AS NOTED DATE:- MARCH 5, 1985

SUBMITTED FOR APPROVAL: Kent Smith

SHEET:- 6 OF 51
PROJECT:- F-170-1(2)
CONTRACT NO. R-17223
BRIDGE FILE:- 1-02-6950

#2052/1956

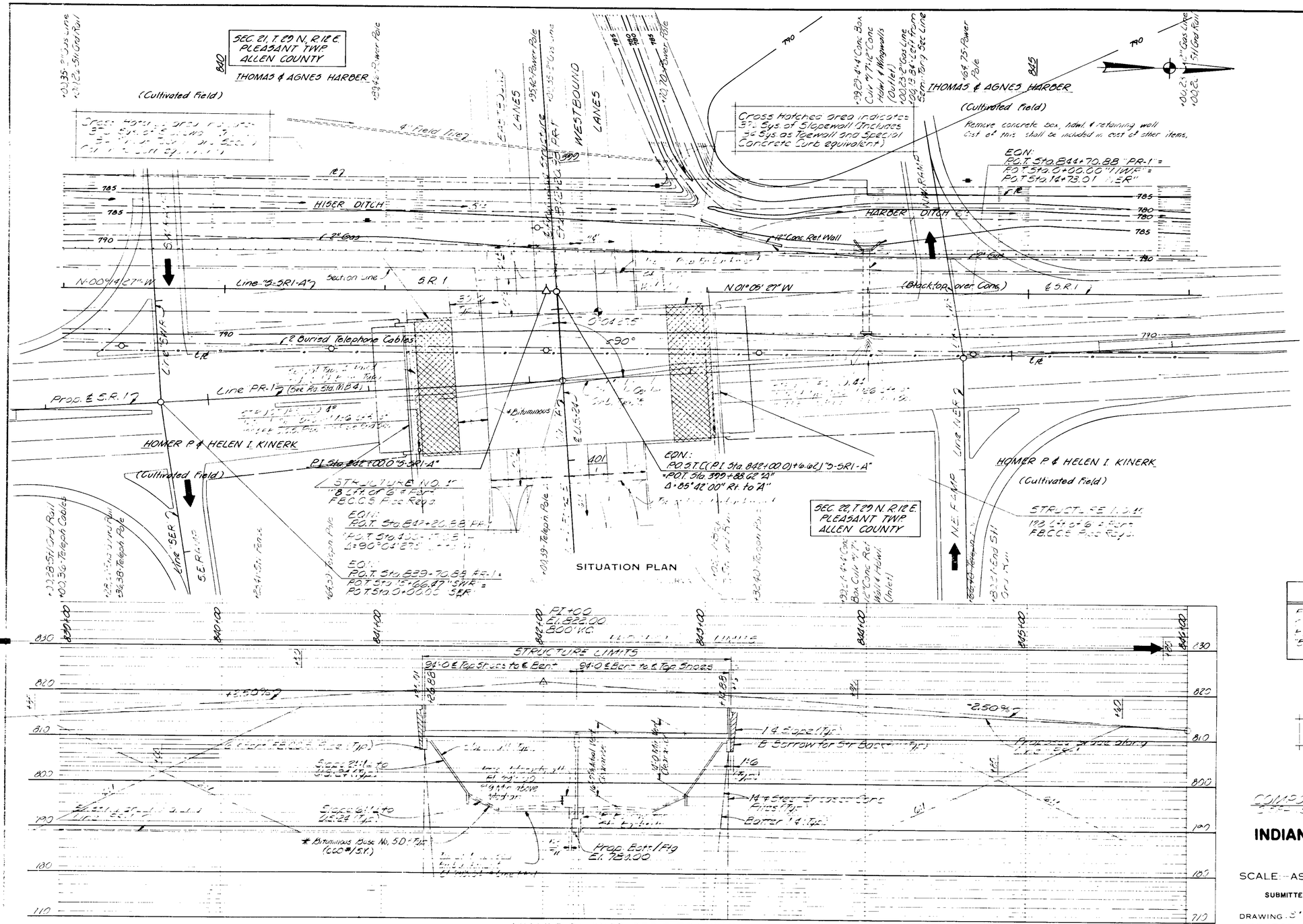

UTILITY OWNERS
Indiana & Michigan Electric Company 2101 Spy Run Avenue Fort Wayne, Indiana 46801
United R.E.M.C. P.O. Box 739 Huntington, Indiana 46750
Indiana Bell Telephone Company 3838 North Rural Street Indianapolis, Indiana 46205
Warrensburg Telephone Corporation P.O. Box 406 Ossian, Indiana
Tri-State Pipe-Line Company 4133 New Haven Road Fort Wayne, Indiana

NOTES

Present Structure-Notes:
See Sheets 2 and 3 for Typical Approach Sections.
See Sheets 4 and 5 for Reference Points, Bench Mark Data and Additional Summary Information.
See Sheet 6 for Soil Borings.

All R/W Referenced to Line A in our notes.

ESTIMATE OF QUANTITIES	
Excavation	34,000 Cu. Yds.
Embankment	0 Cu. Yds.
Excess Excavation	34,000 Cu. Yds.
Structure Backfill	307 Cu. Yds.

*Indicates items not included in the Proposal

NOTE FIELD NOTES, BOOK 10080T

LAYOUT

COMPOSITE 5-TUBE PLATE GIRDER BRIDGE
OVER S.R. 1 & 24'-0" SQUARE, CLEAR ROADWAY PLATES
ON S.R. 1 OVER U.S. 24

INDIANA DEPARTMENT OF HIGHWAYS

ALLEN COUNTY

SCALE:- AS NOTED DATE:- MARCH 5, 1985

SUBMITTED FOR APPROVAL: Lowell E. Smith

DRAWING 3 OF 18 SHEET- 7 OF 41

PROJECT:- F-170-1(2) STATION: 842+00.00 [illegible]

BRIDGE CONTRACT NO. [illegible]

BRIDGE FILE:- [illegible]

Revised 12-15-87 Actual Vertical Clearance, Earthwork Quantities, Pipe Lengths & Approach Slabs

#2052/1356

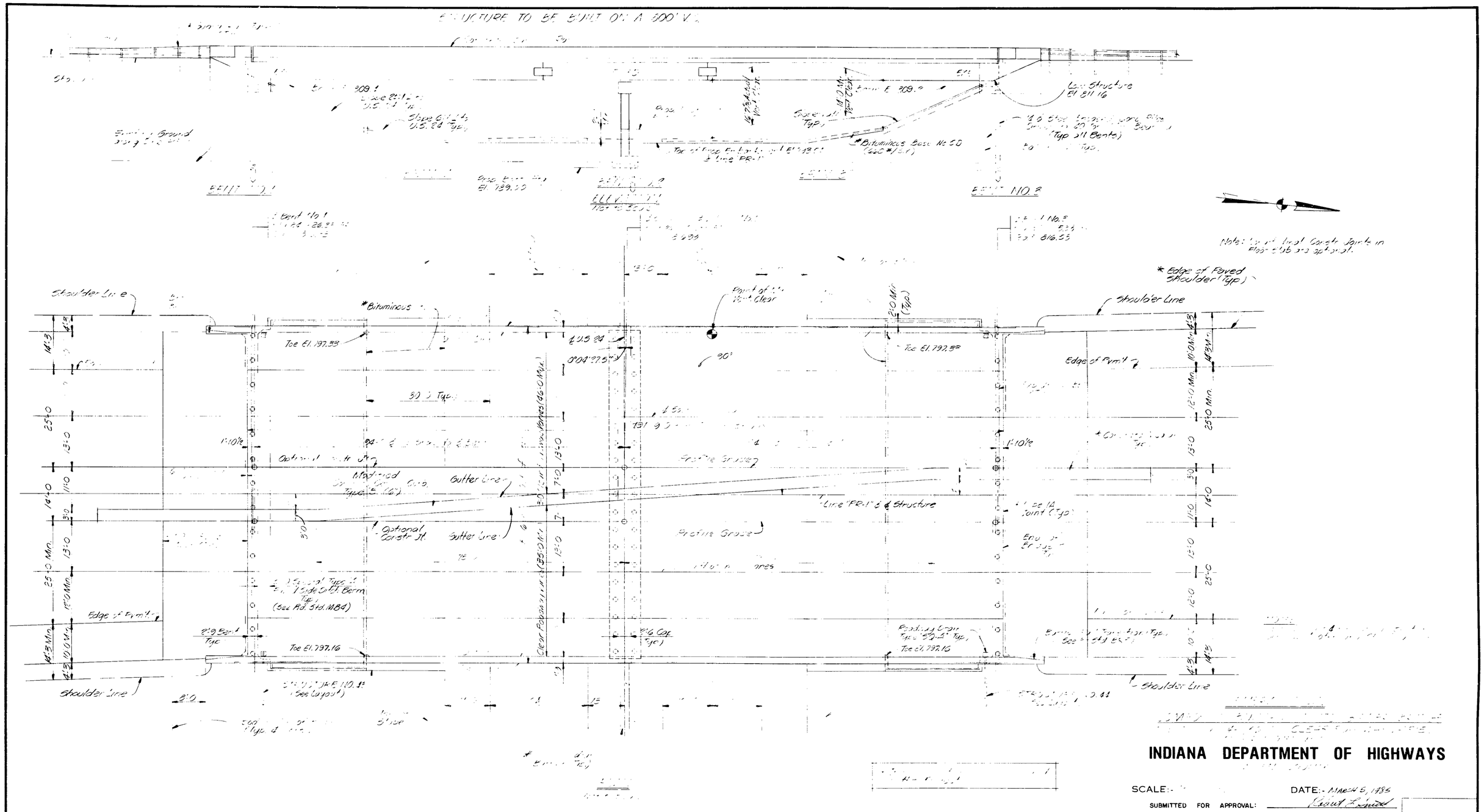

INDIANA DEPARTMENT OF HIGHWAYS

SCALE:-

DATE:- MARCH 5, 1985

SUBMITTED FOR APPROVAL:

DRAWING 5 OF 15 SHEET:- 1 OF 5

PROJECT:-

CONTRACT NO.

BRIDGE FILE:-

DESIGNED CKD

DRAWN CKD

TRACED CKD

Revised 12-15-87 Vertical Clearance, Slopewall Toe Elev., Shoulder Dimensions & Appr. Slabs

#2052/1356

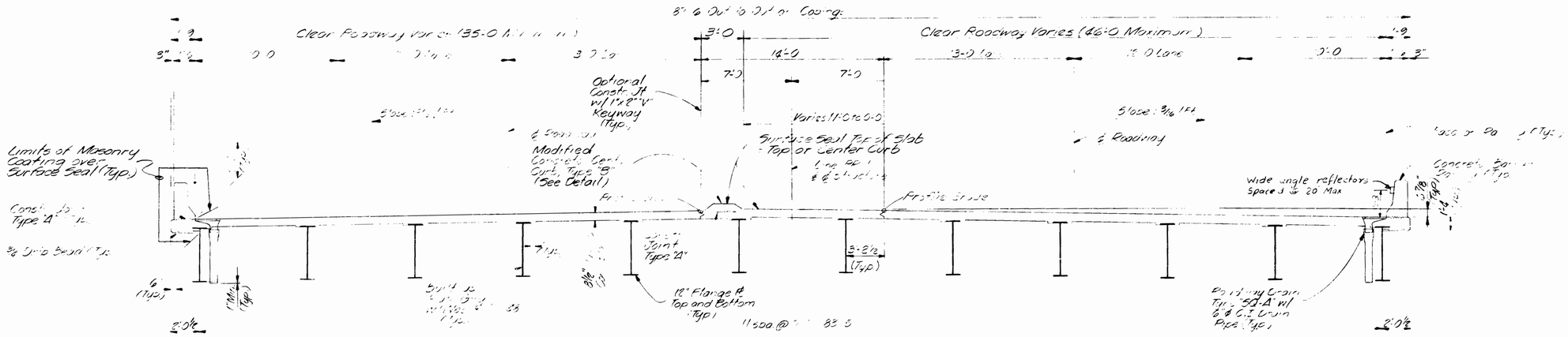

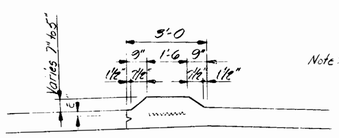

Note: For Additional Curb Details see Dwg. 513 and 514.

CURB DETAIL
Scale: 3/8" = 1'-0

GENERAL NOTES

No preser[illegible] Bridge standard [illegible] 1/2" [illegible] 3/8" in top and [illegible] minimum in bottom of floor slabs, [illegible] 15, [illegible] steel wire shall be 4" and 2" in all other parts unless noted.

[illegible] in footing [illegible] to be Class S. [illegible] slopewall steel embedded after prestressed [illegible] other [illegible] of noted above to be Class A. Concrete [illegible] shall be required [illegible] construction joints as shown on detail drawings. Waterproof backs of wingwalls and wingwalls in accordance with Art. 708.[illegible] of the Specifications. Chamfer exposed edges 3/4" unless noted. Construct slopewall at locations shown or [illegible] allowance in position of pile head maximum 2" in any [illegible] direction. The top of [illegible] face and top of [illegible] wingwalls, top of wingwalls, top of deck, center curb, [illegible] of barrier rails [illegible] underside of deck from copings to exterior beams, [illegible] Reinforcing steel in the [illegible] Bridge Standard [illegible] Sheet for [illegible] coping and [illegible] Paint all steel [illegible] "50-A" Road [illegible] be placed as shown on Dwg. 53.

DESIGN DATA

UNIT STRESSES: [illegible] = 20,000 psi

LIVE LOAD: HS20-44 [illegible] with distribution [illegible] 1983 [illegible] Specifications and all subsequent Interim Specifications.

[illegible]'-0 10" : Actual [illegible] 35#/Sq. Ft. for future wearing surface. [illegible] designed [illegible] a 1 1/2" wearing surface. [illegible] structural deck [illegible] 7"

Note:

The exposed surfaces of Barrier Railings, faces of copings, underside of Floor from Copings to face of Exterior Beams, Outside Face of Wingwalls and all faces of Bent No. 2 except top of cap, shall receive Masonry Coating.
Masonry Coating shall conform to Federal Color Std. 595, Color No. 36642 (Beige)
See the Special Provisions.
Estimated Quantity = 6395 Sft.

STANDARD DRAWINGS	
BRIDGE STANDARDS	
[illegible]	Concrete [illegible] Coating
[illegible]	Pile Splicing Detail [illegible]
[illegible]	Concrete [illegible] Type "A" Joint, Notch
	[illegible] Exp. Joint
	Type B9, Optional Rail Reinf. Splice
D	Type "50-A" Roadway Drain
C4	Prestressed Concrete Piles
S1	"B" Borrow for Structure Backfill
ROAD STANDARDS	
MB2	Concrete Slopewall
MB4	Paved Ditch [illegible] Inlets
M2	Kinds of Pipe
ME2	Pipe End Sections
MC	Type 6 Casting
MD	Type D Inlet
MT1	Delineator Post
M4	Method of Determining Earthwork within Project Limits
MT3	Signs & Sign Posts
2	Standard Detour Signs
2A	Standard Detour Signs
3	Standard Detour Signs
3A	Standard Detour Signs
4	Standard Detour Signs
5	Standard Detour Signs

GENERAL PLAN
[illegible] SUMMER SUNK-UP [illegible] GIRDER BRIDGE
[illegible] @ [illegible] CLEAR ROADWAY VARIES
[illegible]

INDIANA DEPARTMENT OF HIGHWAYS

[illegible] COUNTY

SCALE: [illegible] DATE: March 5, 1985

SUBMITTED FOR APPROVAL: [signature]

DRAWING [illegible] OF 15 SHEET: 12 OF 51
PROJECT: [illegible]
CONTRACT NO. [illegible]
BRIDGE FILE: [illegible]

DESIGNED [illegible] CKD [illegible]
DRAWN [illegible] CKD [illegible]
TRACED [illegible] CKD [illegible]

Revised 12-15-87 Standard Drawings, Gen. Notes, Design Data & Added Masonry Coating Note.

TP118

#2052/1356

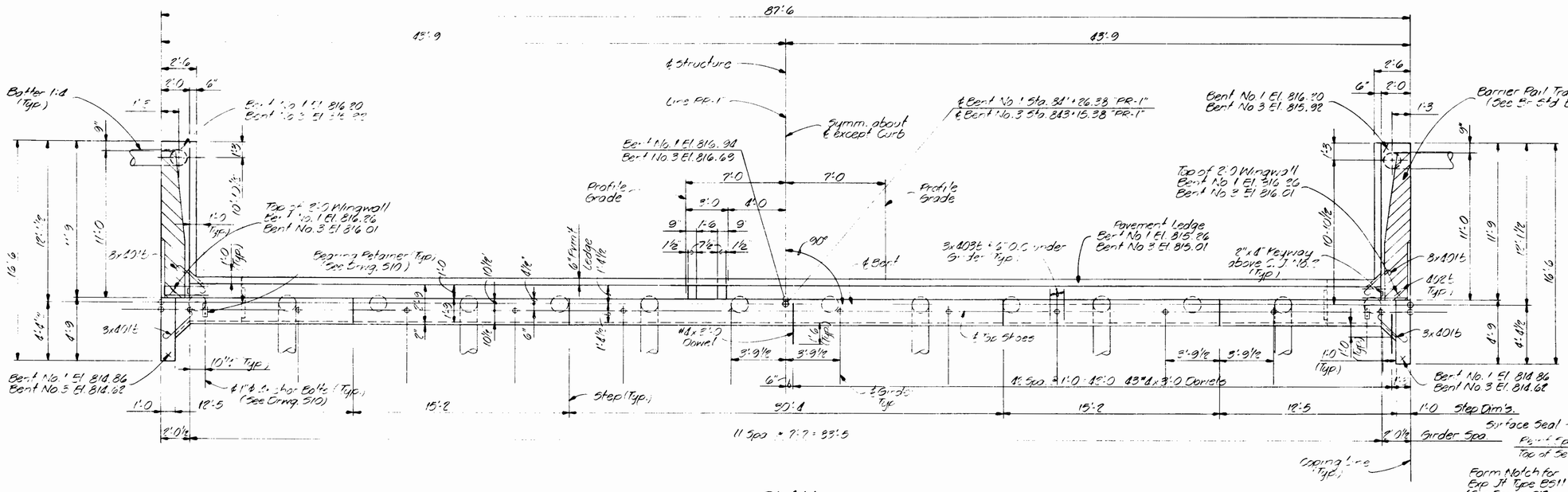

PLAN
Scale: 1/4" = 1'-0

SEAT ELEVATIONS					
Girder No.	(12) and (11)	(10) and (9)	(8) (7) (6) and (5)	(4) and (3)	(2) and (1)
Bent No. 1	810.995	811.160	811.400	811.160	810.995
Bent No. 3	810.680	810.915	811.150	810.915	810.680

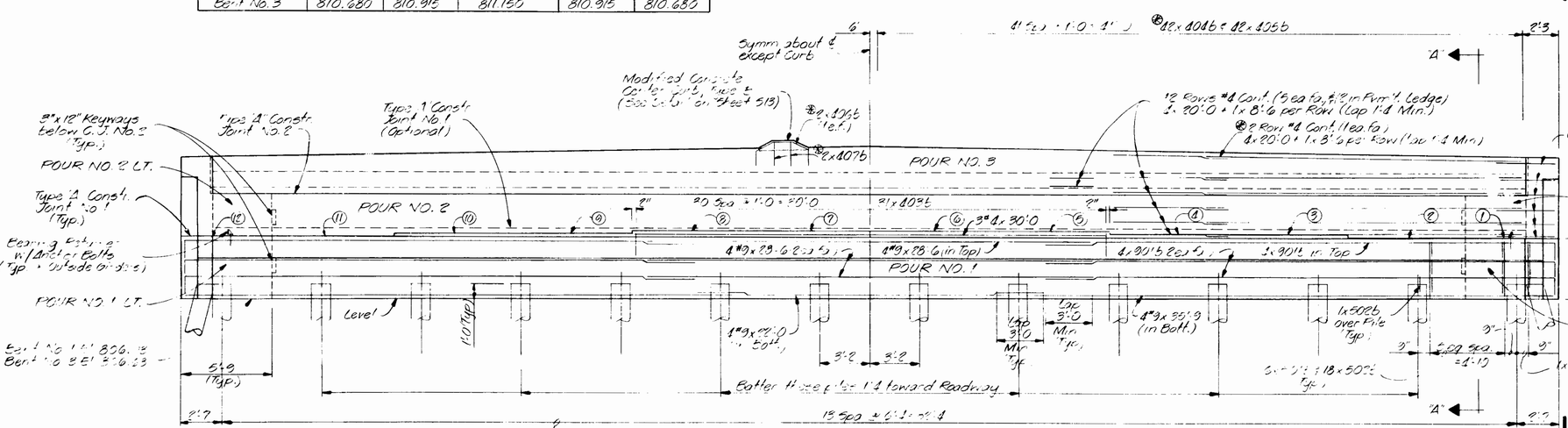

ELEVATION
Scale: 1/4" = 1'-0

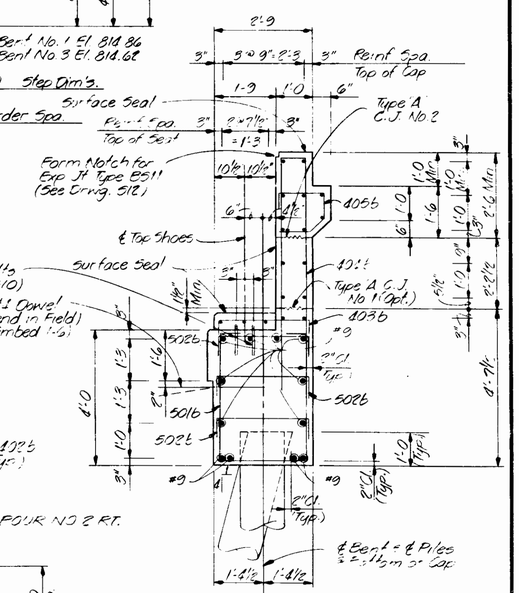

BENT NO. 1 AND BENT NO. 3 DETAILS

INDIANA DEPARTMENT OF HIGHWAYS

ALLEN COUNTY

SCALE:- [illegible]

DATE:- March 5, 1985

SUBMITTED FOR APPROVAL: [illegible]

DRAWING 35 OF 15 SHEET:- 11 OF 51

PROJECT:- I-170-1-18

CONTRACT NO. [illegible]

BRIDGE FILE:- I-0[illegible]

DESIGNED [illegible] CKD. [illegible]
DRAWN [illegible] CKD. [illegible]
TRACED [illegible] CKD. [illegible]

TP118

#2052/1356

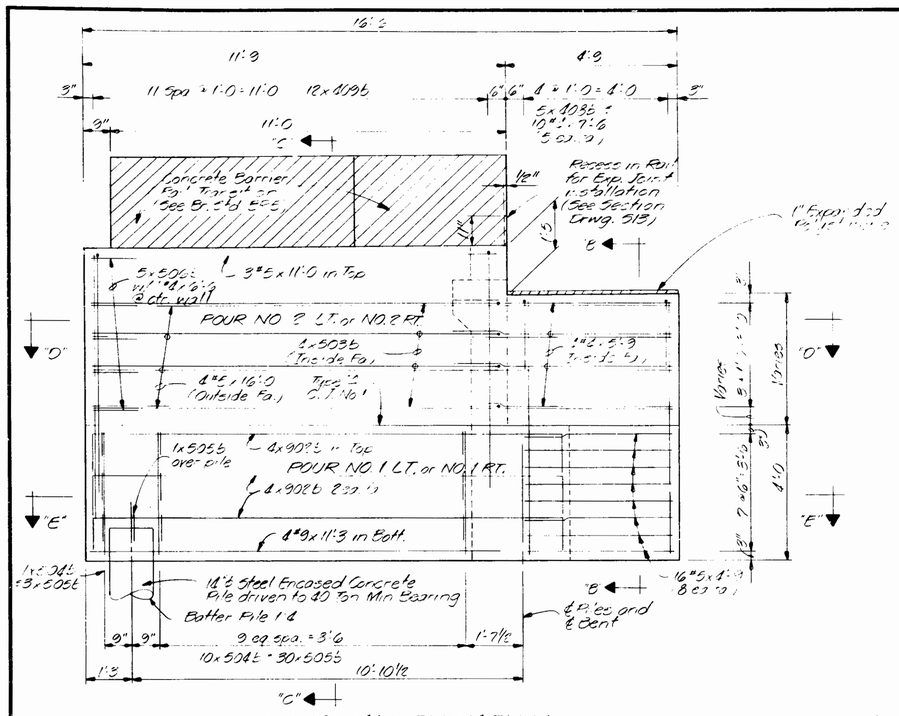

WINGWALL ELEVATION
BENT NO. 1 (SHOWN)
BENT NO. 3 (OPP. HAND)
Scale: 1/8" = 1'-0

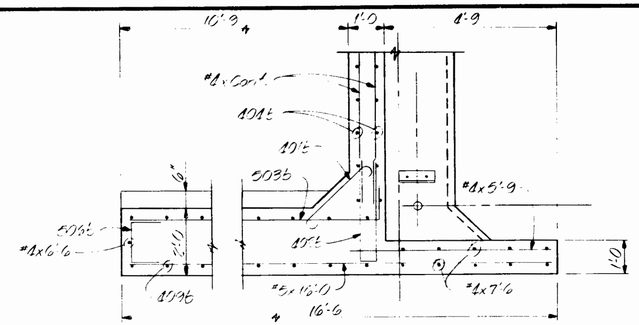

PLAN - SECTION "D-D"
Scale: 1/8" = 1'-0

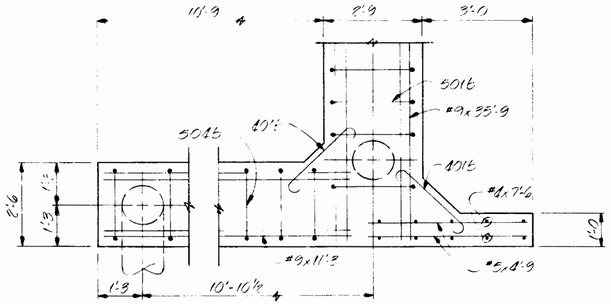

PLAN - SECTION "E-E"
Scale: 1/8" = 1'-0

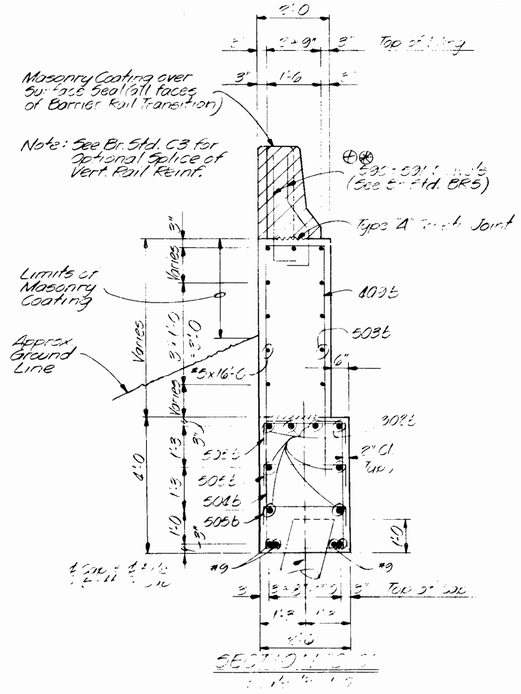

SECTION "H-H"

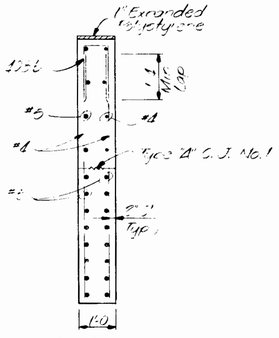

SECTION "E-E"

BAR BENDING SCHEDULE

Mark	Length	Type	A	B	C	D	E	G	H	K	O
901b	33'-11	17		1'-7	32'-4	—					
902b	16'-4	17		1'-7	13'-8	1'-7					
501b	10'-9	56	6"	3'-8	2'-5	3'-8		6"			
502b	3'-5	17		6"	2'-5	6"					
503b	12'-3	17		10"	11'-5	—					
504b	10'-6	56	6"	3'-3	2'-2	3'-3		5"			
505b	3'-2	17		6"	2'-2	6"					
506b	4'-11	17		1'-8	1'-7	1'-3					
590	3'-9	17		7"	3'-2	—					
591	3'-11	4	7"	7"	1'-1	1'-8	—	—	7"	11"	—
401b	3'-6	1	6"	2'-6				6"			
402b	7'-4	17		3'-4	8"	3'-4					
403b	4'-5	17		1'-0	2'-5	1'-0					
404b	14'-8	17		7'-0	3"	7'-0					
405b	3'-11	22	3"	1'-2	9"	7"	9		5"	5"	
406b	5'-1	14	1'-0	10 1/8"	1'-4	10 1/8"	1'-0		6"	7 1/8"	5'-9
407b	3'-8	17		1'-6	8"	1'-6					
408b	2'-7	17		1'-5 1/8	2"	1'-5 1/8					
409b	14'-3	17		6'-3 1/8	1'-8	6'-3 1/8					
490	1'-9	511							9 1/2"		4"
491	2'-5	511							1'-1 1/2		4"
492	10'-7	4	—	4'-6	2'-1	4'-0	—	—	6"	2'-0	—

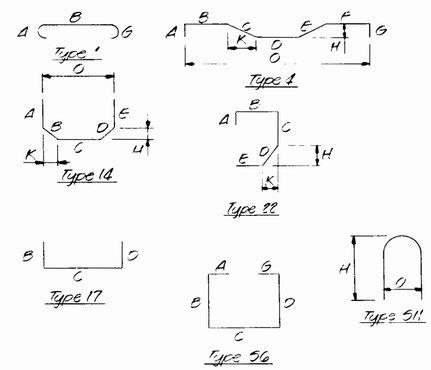

BAR BENDING DETAILS
Not to Scale

BILL OF MATERIALS
BENT NO. 1
BENT NO. 3 SAME UNLESS NOTED

REINFORCING STEEL

Mark & Size	No. of Bars	Length (Ft.)	Weight Lbs.
901b	16	33'-11	
902b	16	16'-4	
#9	8	35'-9	
#9	8	22'-6	
#9	4	22'-0	
#9	8	11'-3	
Total #9 (Plain)			5086
501b	80	10'-9	
502b	254	3'-5	
503b	8	12'-3	
504b	22	10'-6	
505b	64	3'-2	
506b	10	4'-11	
590	52	3'-9	
591	10	3'-11	
#5	8	16'-0	
#5	6	11'-0	
#5	32	4'-9	
Total #5 (Plain)			2769
Total #5 (Epoxy Coated)			211
401b	22	3'-6	
402b	12	7'-4	
403b	67	4'-5	
⊛ 404b	84	14'-8	
405b	84	3'-11	
⊛ 406b	2	5'-1	
⊛ 407b	2	3'-8	
408b	10	3'-7	
409b	24	14'-3	
⊕⊛ 490	8	1'-9	
⊖⊛ 491	6	2'-5	
⊕⊛ 492	6	10'-7	
#4	3	30'-0	
⊛	48	20'-0	
⊛	8	30'-0	
	12	8'-6	
⊛	2	8'-6	
	22	7'-6	
⊕⊛	8	6'-6	
	8	5'-9	
⊕⊛	8	5'-3	
#4	86	3'-0	
Total #4 (Plain)			1365
Total #4 (Epoxy Coated)			1077
Total Steel (Plain)			8918
Total Steel (Epoxy Coated)			[illegible]

⊛ Denotes Epoxy Coated Bars
⊕ Denotes Bars reqd. for Barrier Rail Transition (See Br. Std. BR5)

NOTES
See Gen. Notes for General Notes.
See Br. Std. C1 for Bar Bending Notes.
See Br. Std. C3 for Constr. Joint Type A.

BILL OF MATERIALS (CONT.)
BENT NO. 1
BENT NO. 3 SAME UNLESS NOTED

CONCRETE	
POUR NO. 1	34.1 Cys.
POUR NO. 1 LT. OR NO. 1 RT.	7.00 Cys.
POUR NO. 2	6.2 Cys.
POUR NO. 2 LT. OR NO. 2 RT.	3.7 Cys.
POUR NO. 3	10.7 Cys.
Total Class "A" in Substructure	76.1 Cys.
Class "S" Concrete Railing	[illegible] Cys.

MISCELLANEOUS	
14" ϕ Steel Encased Concrete Piles (Typ.)	
Bent No. 1 16 @ 30' Each	480 Lft.
Bent No. 3 16 @ 50' Each	800 Lft.
Masonry Coating	201 Sft.
Surface Seal	832 Sft.

Revised 12-15-87 Added Masonry Coating & Recess in End of Rail

BENT NO. 1 AND BENT NO. 3 DETAILS

INDIANA DEPARTMENT OF HIGHWAYS

SCALE: [illegible] DATE: March 5, 1986
SUBMITTED FOR APPROVAL: [illegible]

DRAWING 56 OF 15 SHEET: 12 OF 51
PROJECT: [illegible]
CONTRACT NO. [illegible]
BRIDGE FILE: 1-09-3950

DESIGNED [illegible] CKD [illegible]
DRAWN [illegible] CKD [illegible]
TRACED ____ CKD ____

#2052/1356

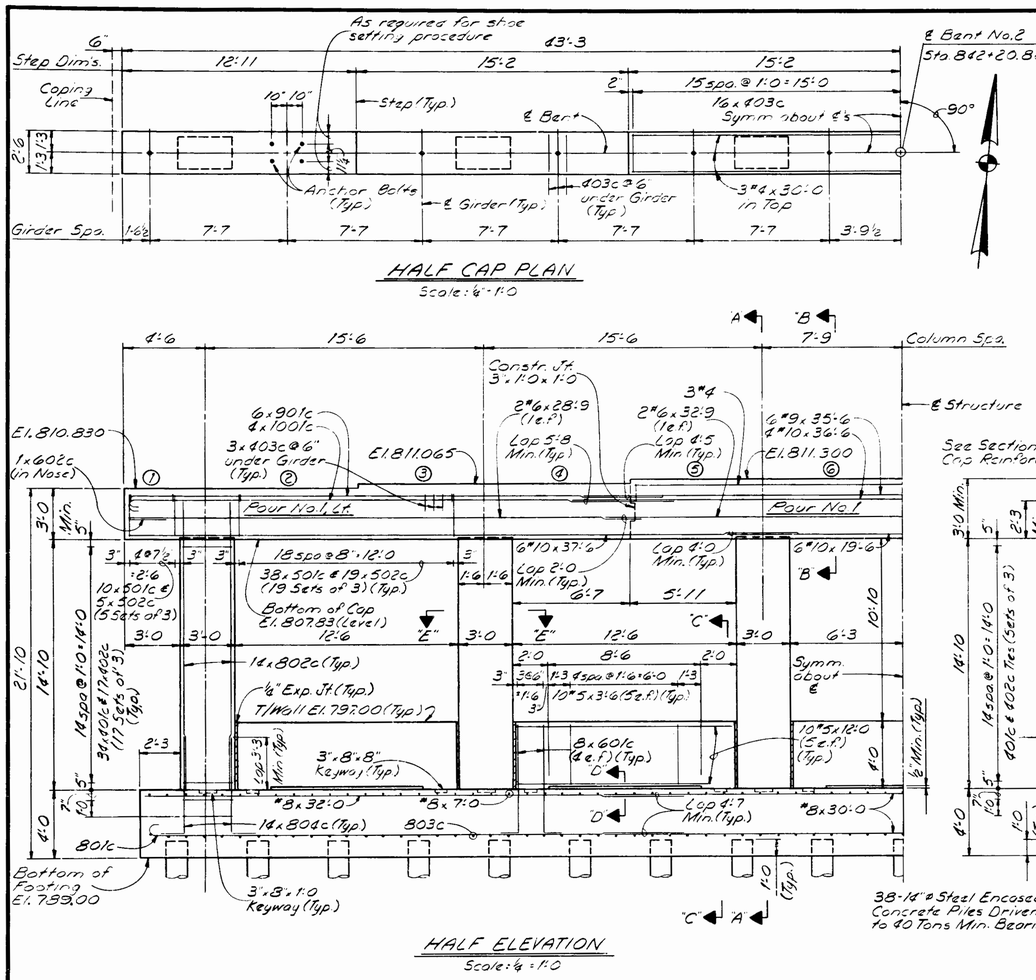

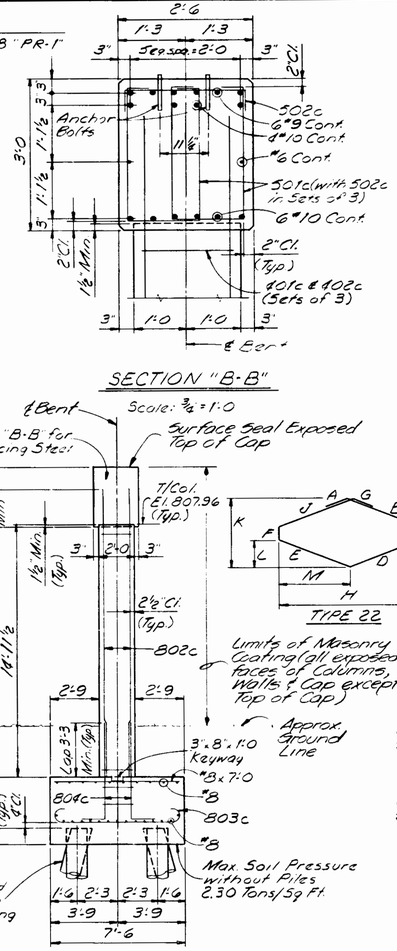

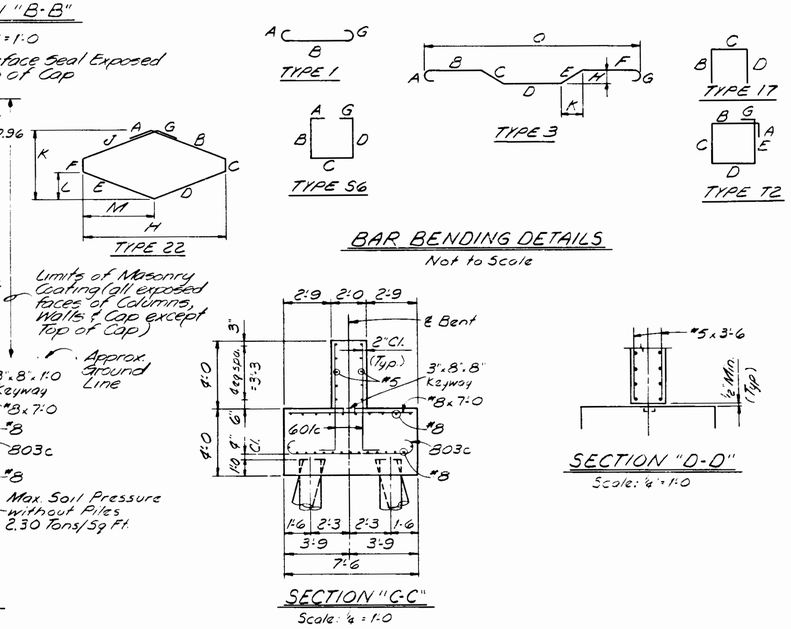

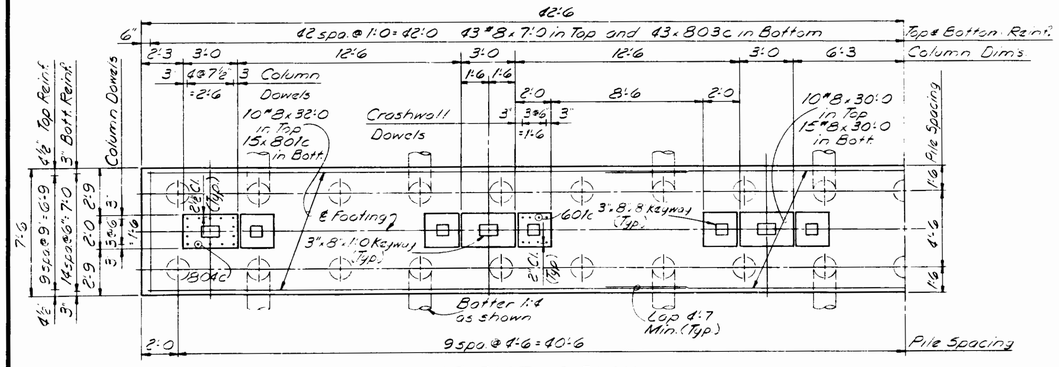

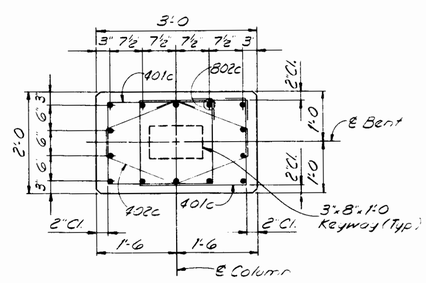

Revised 12-15-87 Added Masonry Coating

BAR BENDING SCHEDULE

Mark	Length	Type	A	B	C	D	E	F	G	H	J	K	L	M
100c	31'-11	1	1'-5	30'-6					–					
90c	31'-0	1	1'-3	29'-9					–					
80c	32'-9	1	11"	31'-10					–					
80c	17'-2	3	–	12'-7	1'-1	3'-6	–	–	–	2"		1'-0		
80c	8'-10	1	11"	7'-0					11"					
80c	7'-3	17		5'-11	1'-4	–								
60c	7'-6	17		6'-6	1'-0	–								
60c	6'-0	17		2'-0	2'-0	2'-0								
50c	7'-9	56	6"	2'-8	1'-5	2'-8			6"					
50c	3'-2	17		6	2'-2	6"								
40c	8'-3	72	4½"	2'-1	1'-8	2'-1	1'-8		4½"					
40c	7'-9	22	4½"	1'-5	8"	1'-5	1'-5	8"	4½"	2'-8	1'-5	1'-8	6"	1'-4
40c	4'-2	17		1'-0	2'-2	1'-0								

BILL OF MATERIALS
BENT NO. 2

REINFORCING STEEL

Mark or Size	No. of Bars	Length (Ft.)	Weight (Lbs.)
100c	8	31'-11	
#10	12	37'-6	
#10	4	36'-6	
#10	6	19'-6	
Total #10			4167
90c	12	31'-0	
#9	6	35'-6	
Total #9			1989
80c	30	32'-9	
80c	84	17'-2	
80c	85	8'-10	
80c	84	7'-3	
#8	20	32'-0	
#8	25	30'-0	
#8	85	7'-0	
Total #8			15,404
60c	80	7'-6	
60c	2	6'-0	
#6	2	32'-9	
#6	4	28'-9	
Total #6			1190
50c	210	7'-9	
50c	105	3'-2	
#5	50	12'-0	
#5	50	3'-6	
Total #5			2853
40c	204	8'-3	
40c	102	7'-9	
40c	67	4'-2	
#4	3	30'-0	
Total #4			1899
Total Steel			27,502

CONCRETE

Class "A" in Cap	
Pour No. 1	9.8 Cu.
Pour No. 1, Lt.	3.1 Cu.
Pour No. 1, Rt.	8.1 Cu.
Total Class "A" in Cap	26.0 Cu.
Class "A" in Columns	19.9 Cu.
Total Class "A" in Substructure	45.9 Cu.
Class "B" above Footings (in Crosswalls)	18.5 Cu.
Class "B" in Footing	94.4 Cu.

MISCELLANEOUS

38-14" ø Steel Encased Concrete Piles @ 40'-0 Each (.197 Ga.)	1320 L.F.
Masonry Coating	201 S.Y.
Surface Seal	195 S.Y.

NOTES

See Drwg. S4 for General Notes.
72 hours shall elapse after completing Cap Pour No. 1 before making Pours No. 1 Left and No. 1 Right.
See Drwg. S10 for Anchor Bolt Detail.
Holes for Anchor Bolts may be cored or drilled.
Dimensions shown are for locating cores & holes.
Anchor Bolts shall be set in non-shrinking grout.
See Bridge Standard C1 for Reinforcing Bar Notes.
As an alternate, prestressed concrete piles may be used in place of steel encased concrete piles. See Bridge Standard C4.

BENT NO. 2 DETAILS

INDIANA DEPARTMENT OF HIGHWAYS

ALLEN COUNTY

SCALE: – AS NOTED

DATE – November 5, 1985

SUBMITTED FOR APPROVAL: Lawrence L. Schmitt

DRAWING S7 OF 15 SHEET: 13 OF 51

PROJECT: F-170-1(2)

BRIDGE CONTRACT NO. R-7183

BRIDGE FILE: 1-02-6950

DESIGNED J. Gray CKD. S. Gu
DRAWN J. Mc CKD. D. Miller
TRACED CKD.

TP118

#2052/1956

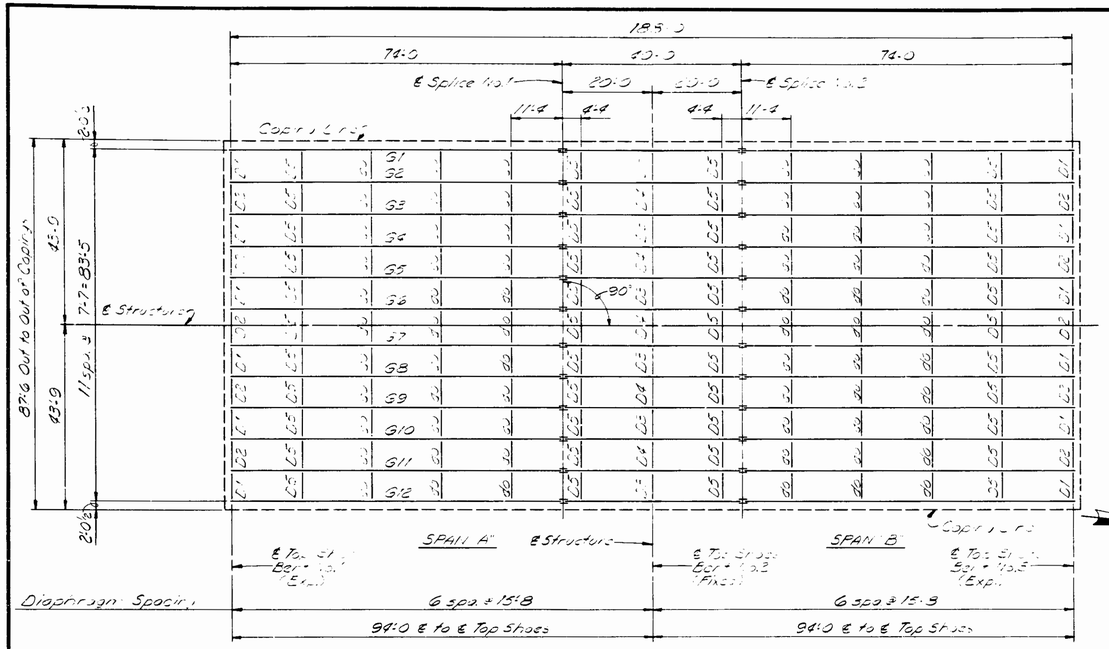

FRAMING PLAN

Scale: 1/32" = 1'-0

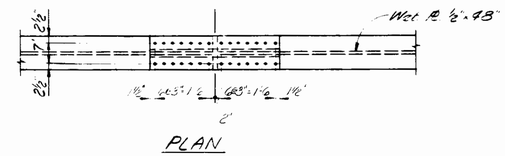

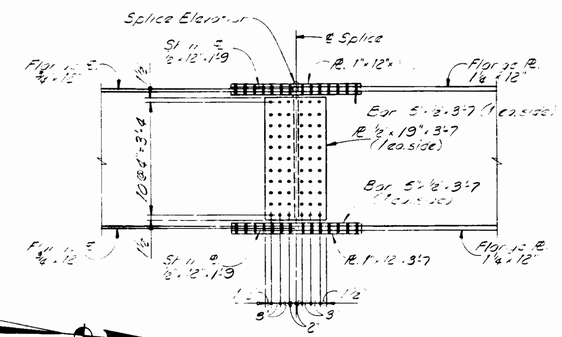

SPLICE DETAILS

SPLICE NO.1 (SHOWN)

SPLICE NO.2 (OPP. HAND)

Scale: 1/2" = 1'-0

Note: The elevations below are with the falsework removed and carrying steel dead loads only. Top of girder splice plates shall be adjusted to the elevations below before cutting field splices.

TABLE OF SPLICE ELEVATIONS

Girder	Splice No.1	Splice No.2
G1	815.855	815.820
G2	815.975	815.920
G3	816.090	816.060
G4	816.210	816.160
G5	816.330	816.275
G6	816.445	816.395
G7	816.445	816.395
G8	816.330	816.275
G9	816.210	816.160
G10	816.090	816.060
G11	815.975	815.920
G12	815.855	815.820

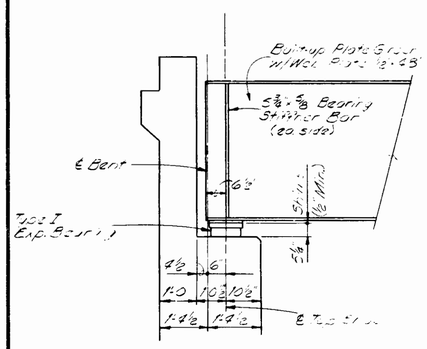

SECTION @ BENT NO.1

OR BENT NO.3

Scale: 1/2" = 1'-0

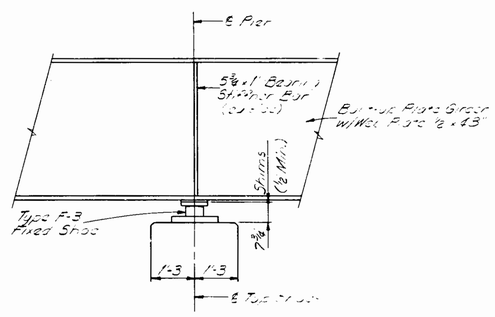

SECTION @ BENT NO.2

Scale: 1/2" = 1'-0

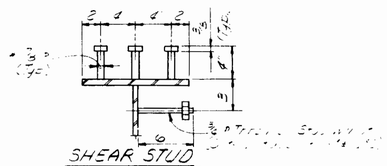

SHEAR STUD

CONNECTOR DETAIL

Not to Scale

DESIGN DATA

LIVE LOADS:

DEAD LOADS:

FLOOR SLAB:

DESIGN METHOD:

Revised 12-15-87 Painting Note

GENERAL FABRICATION AND ERECTION NOTES

High strength bolts 7/8" ø unless noted: Open holes 15/16" ø unless noted.

All structural steel shall conform to ASTM A-572 (Gr. 50) unless otherwise noted. (See Note Below)

All butt welds shall be subject to radio-graphic inspection at the option of the Engineer.

The Contractor shall prepare detailed working or shop drawings to enable him to fabricate, erect, and construct all parts of the work in conformity with the Engineer's drawings and specifications and shall submit four (4) copies to the Engineer. See Article 711.04 of the Specifications.

The shop details shall show a plan of match marking for all reamed pieces. All splice plates to be removed, cleaned and deburred after reaming. Splice plates shall not extend beyond the end of beam after bolting for shipment.

The shop plans shall indicate whether reaming or drilling is to be done in shop or field. If shop reaming or drilling is used the beams shall be assembled in accordance with no load camber and reaming diagram. If the beams are shop reamed or drilled, full size drift pins shall be used in erection.

Structural steel for welding may be flame cut if the flame cutting is mechanically guided. Hand flame cutting shall be used only when approved, and the surface is further treated by milling, grinding, or chipping and grinding.

All shop butt welds in flange plates shall be ground smooth and flush with the base metal on all surfaces. This shall apply to both parts of equal thickness and unequal thickness. Grinding shall be done in the direction of stress and in such a manner that the metal is kept below the blue brittle range. Any defects exposed by the grinding shall be cleaned, filled with weld metal, and reground to a uniform finish.

If curves in plates and angles are flame cut, they shall be ground smooth.

Beams must be cambered to a smooth curve. Camber must be checked after shop welding is completed and while beams are supported in such a way as to have no bending moment in the direction of camber.

Sheared plates or universal mill plates shall be used for girder webs, and shall be ordered with sufficient additional width to allow for trimming of edges to provide built-in camber for deadload deflection and vertical curve. Trimming shall be by flame cutting. The faying surfaces of the web and flange plates and the adjacent surfaces that are to be fillet welded shall be cleaned by grinding prior to assembly and welding of web to flange.

When the girder sections are fit up in the shop for reaming or drilling of field splices, the centerlines of opposing flanges shall not deviate more than 1/8 inch with the webs in alignment.

Holes for girder splices, and the splice plates shall be subpunched or subdrilled and reamed to size while assembled. See Art. 711.24 of the Specifications. Flange splice bars shall have planed or rolled edges and holes in bars shall be subdrilled and reamed or drilled full size while assembled.

Diameter of holes in all material connecting top shoes to girder flanges to be 1" ø. Bolts connecting girder flange to top shoe shall extend into top shoe a minimum of 1 inch.

Shims between girder and top shoe may be built-up. No shim shall be less than 1/8" thickness.

All structural steel is to be erected using full size drift pins and snug-tight bolts in a minimum of 50% of the holes in any connection. See Art. 711.59 of the Specifications. The elevations shall be checked before bolting field splices and while the structural steel is unsupported by falsework.

Rivets shall not be used in the assembly of structural steel.

Estimated weight of structural steel is 421,500 Lbs including 1400 Lbs. of A-514 and 53700 Lbs. of A-36.

The weight of high strength bolts is not included in the estimated weight of structural steel. The cost of these bolts shall be included in the cost of structural steel.

All structural steel shall be painted in accordance with the [illegible] Specifications except the color of the finish coat shall be as noted: Field Paint - Vinyl Finish Coat shall conform to Federal Color Std. 595, Color No. 35595, Light Blue

Shop Paint - Zinc Silicate

The Contractor may substitute A-588 steel for A-572 (Gr. 50) at his option.

Material in Interior Diaphragms, Jacking Frames, Cross Frames and Diaphragm Connection PL's shall be A-36.

Material in shoes shall be A-36 unless otherwise noted.

All materials in Girders including Webs, Flanges, Bearing Stiffeners and all splice material shall be A-572 (GR-50).

NOTES

See Drwg S4 for General Notes

See Drwg S9 for Girder Elevation, Shims and Field Details.

See Drwg S10 for Expansion Bearings and Fixed Shoes

FRAMING PLAN AND STRUCTURAL STEEL DETAILS

INDIANA DEPARTMENT OF HIGHWAYS

ALLEN COUNTY

SCALE: AS NOTED

DATE: March 5, 1985

SUBMITTED FOR APPROVAL: Robert L. Smith

DRAWING S8 OF 15 SHEET 18 OF 81

PROJECT: F-170-1(2)

CONTRACT NO.

BRIDGE FILE: 1-02-6950

DESIGNED	S. Beard	CKD	R. Smith
DRAWN	D. McKay	CKD	D. Miller
TRACED		CKD	

#2052/1956

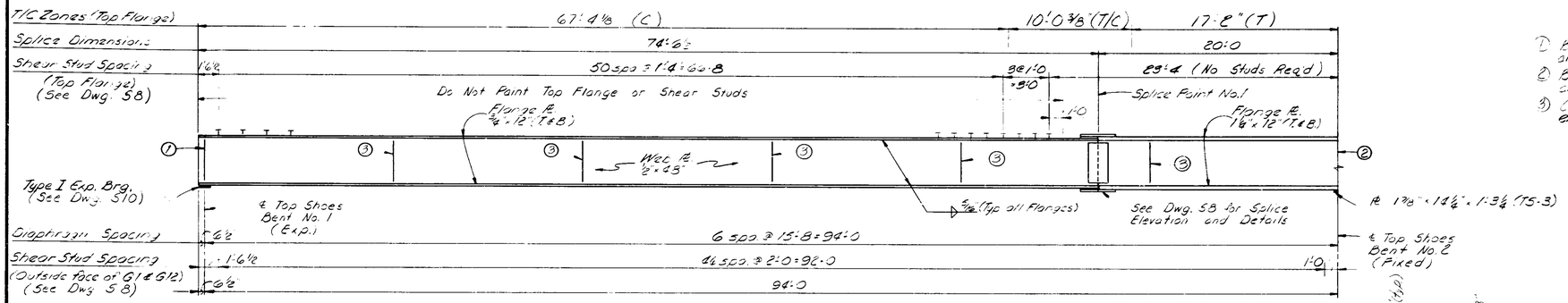

1. Bearing Stiffener and Connection Bar for Jacking Frame D1 and Cross Frame D2 (Bar 5 3/4" x 5/8", 1 ea side).
2. Bearing Stiffener and Connection Bar for Jacking Frame D3 and Cross Frame D4 (Bar 5 3/4" x 1", 1 ea side)
3. Connection Bar for Interior Diaphragm (Bar 4" x 1/2", 1 ea side except only one req'd. on inside of web at the outside Girders)

(T) = Tension
(T/C) = Tension or Compression
(C) = Compression

GIRDER ELEVATION ~ SPAN "A" (SHOWN)
GIRDER ELEVATION ~ SPAN "B" (OPP HAND)

Not to scale

TABLE OF CAMBERS	Span "A"				Span "B"			
	1/4 Point	1/2 Point	3/4 Point	℄ Splice No. 1	℄ Splice No. 2	1/4 Point	1/2 Point	3/4 Point
Dead Load Steel	3/16"	5/16"	1/2"	1/16"	1/2"	1/16"	3/16"	3/16"
Dead Load Conc.	1 11/16"	1 3/16"	9/16"	7/16"	7/16"	9/16"	1 3/16"	1 11/16"
SIP Total	1 1/4"	1 1/2"	5/8"	1/2"	1/2"	5/8"	1 3/8"	1 1/4"
Vertical Curve	5/8"	13/16"	5/8"	9/16"	9/16"	5/8"	13/16"	5/8"
Total Camber	1 7/8"	2 7/16"	1 1/4"	1 1/16"	1 1/16"	1 1/4"	2 7/16"	1 7/8"

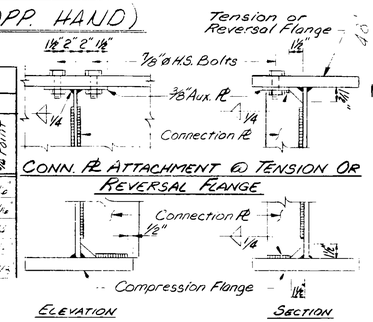

CONN. PL ATTACHMENT @ TENSION OR REVERSAL FLANGE

CONN. PL ATTACHMENT @ COMPRESSION FLANGE

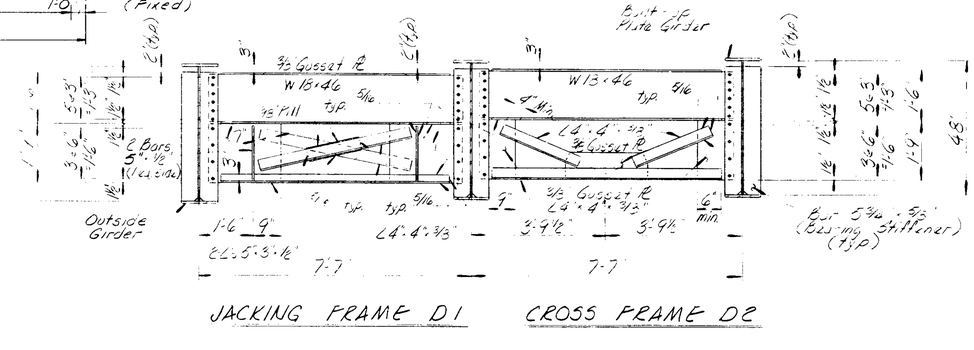

JACKING FRAME D1 — CROSS FRAME D2

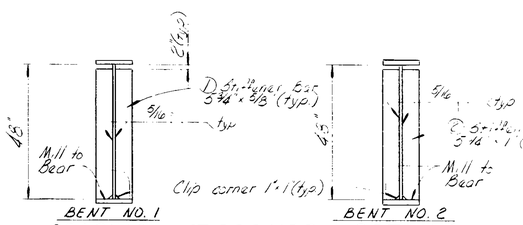

BENT NO. 1 — BENT NO. 2

BEARING STIFFENER DETAILS

Not to Scale

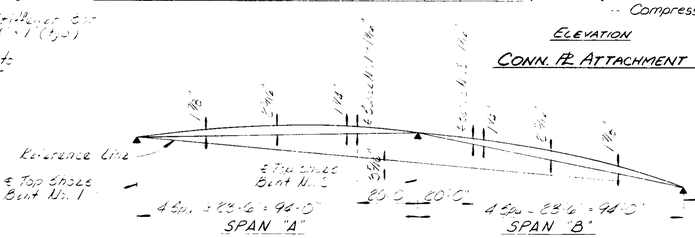

NO LOAD CAMBER AND REAMING DIAGRAM

Not to Scale

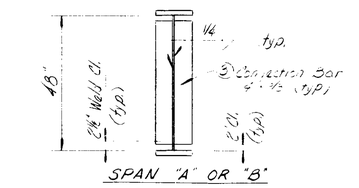

INTERIOR DIAPHRAGM CONNECTION DETAIL

TABLE OF SHIMS												
GIRDER	G1	G2	G3	G4	G5	G6	G7	G8	G9	G10	G11	G12
Bent No. 1	1/2"	1 5/16"	1/2"	1 5/16"	1/2"	1 9/16"	1/2"	1/2"	1 5/16"	1/2"	1 5/16"	1/2"
Bent No. 2	1/2"	1 3/16"	1/2"	1 9/16"	1/2"	1 9/16"	1 5/16"	1/2"	1 5/16"	1/2"	1 3/16"	1/2"
Bent No. 3	1/2"	1 5/16"	1/2"	1 5/16"	1/2"	1 9/16"	1 5/16"	1/2"	1 5/16"	1/2"	1 5/16"	1/2"

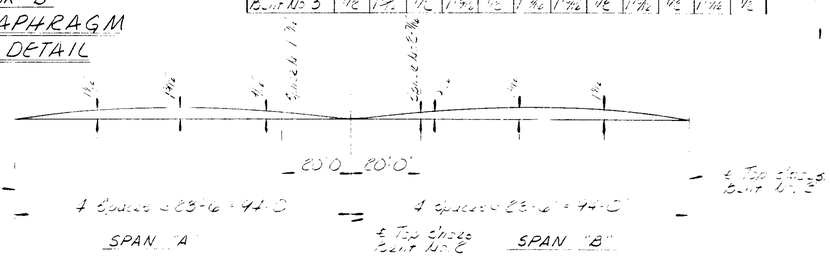

CONCRETE DEAD LOAD DEFLECTION DIAGRAM

Not to Scale

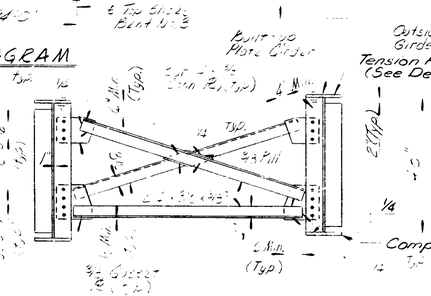

INTERIOR DIAPHRAGM D5

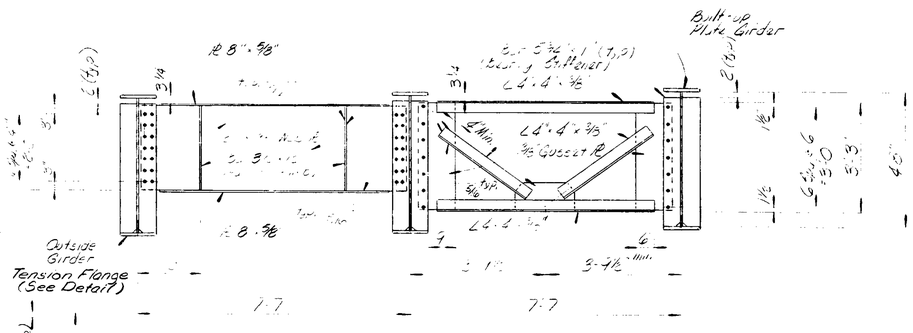

JACKING FRAME D3 — CROSS FRAME D4

DIAPHRAGM DETAILS

NOTES

See Dwg. S4 for General Notes
See Dwg. S3 for General Foundation and Erection Notes and Framing Plan.

GIRDER ELEVATION AND STRUCTURAL STEEL DETAILS

INDIANA DEPARTMENT OF HIGHWAYS
ALLEN COUNTY

SCALE:- AS NOTED — DATE:- March 5, 1985
SUBMITTED FOR APPROVAL:

DRAWING S9 OF 15 — SHEET 15 OF 51
PROJECT F-170-1(2)
CONTRACT NO. R-17483
BRIDGE FILE 1-02-6950

DESIGN J. Stand — CKD R. Smith
DRAWN F. Fitz — CKD D. Miller
TRACED — CKD

Rev. 2-25-85 Interior Diaphragm D5: Conn. PL Details Added

#2052/1350

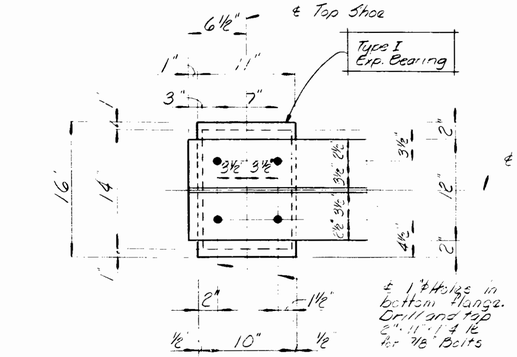

PLAN

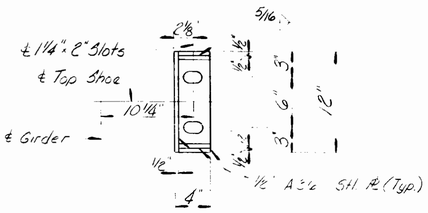

PLAN

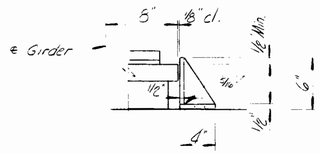

SIDE RETAINER

Note: Top Plate of Exp. Brg. (2"×11"×1'-4") with 7/8" ϕ Bolts w/ Lock Washers to be included in the cost of "Elastomeric Expansion Bearings". Side Retainer to be included in cost of "Structural Steel".

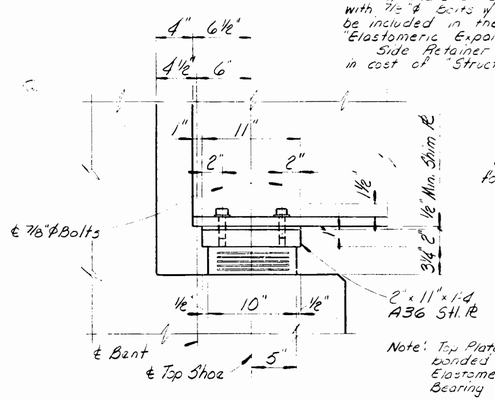

Note: Top Plate to be bonded to Elastomeric Bearing Pad.

ELEVATION

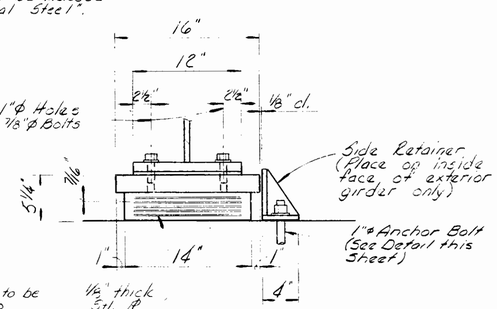

SECTION

ELASTOMERIC EXPANSION BEARING DETAILS - TYPE I

Scale: 1/2" = 1'-0

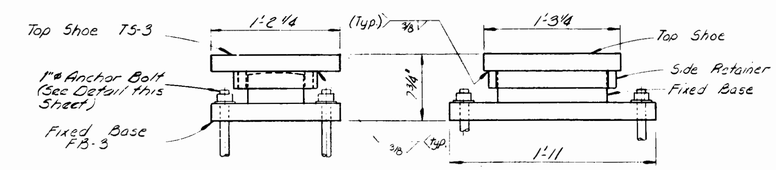

TYPE F-3 FIXED SHOE

Notes: Curved surfaces of shoes to be machined after weldments have been completed.

At the contractors option the following substitutions of materials will be allowed at no increase in unit price of materials.

1. A-588 steel may be used in lieu of A-36 steel.
2. A-514 steel may be used in lieu of A-588 or A-36 steels.

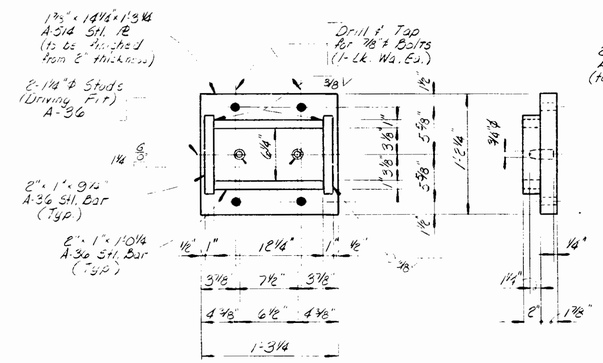

TOP SHOE TS-3

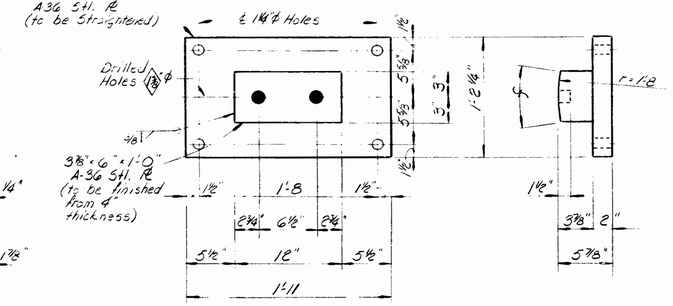

FIXED BASE FB-3

FIXED SHOE DETAILS

Scale: 1/2" = 1'-0

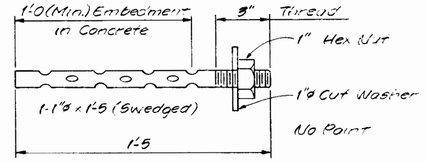

Anchor Bolts to be furnished with and included in the cost of Str. Steel.

ANCHOR BOLT-AB

Not to Scale

GENERAL PROCEDURE

After all connections have been bolted, adjust the superstructure longitudinally so that the distance from ℄ Top Shoes to face of N.J. at each end bent is equal. The elastomeric bearing pads shall not be deflected following this adjustment.

With the superstructure in the adjusted position set anchor bolts at Bent No. 2.

NOTE

See Dwg. S4 for General Notes.

BEARING ASSEMBLY DETAILS

INDIANA DEPARTMENT OF HIGHWAYS

ALLEN COUNTY

SCALE:- AS NOTED DATE:- March 6, 1985

SUBMITTED FOR APPROVAL: Robert E. Shultz

DRAWING:- S10 OF 15 SHEET:- 16 OF 51

PROJECT:- F-170-1(2)

CONTRACT NO R-17483

BRIDGE FILE: 1-02-6950

DESIGNED J. Brand CKD R. Smith
DRAWN C. Fritts CKD D. Miller
TRACED CKD

TP118

#2032/1356

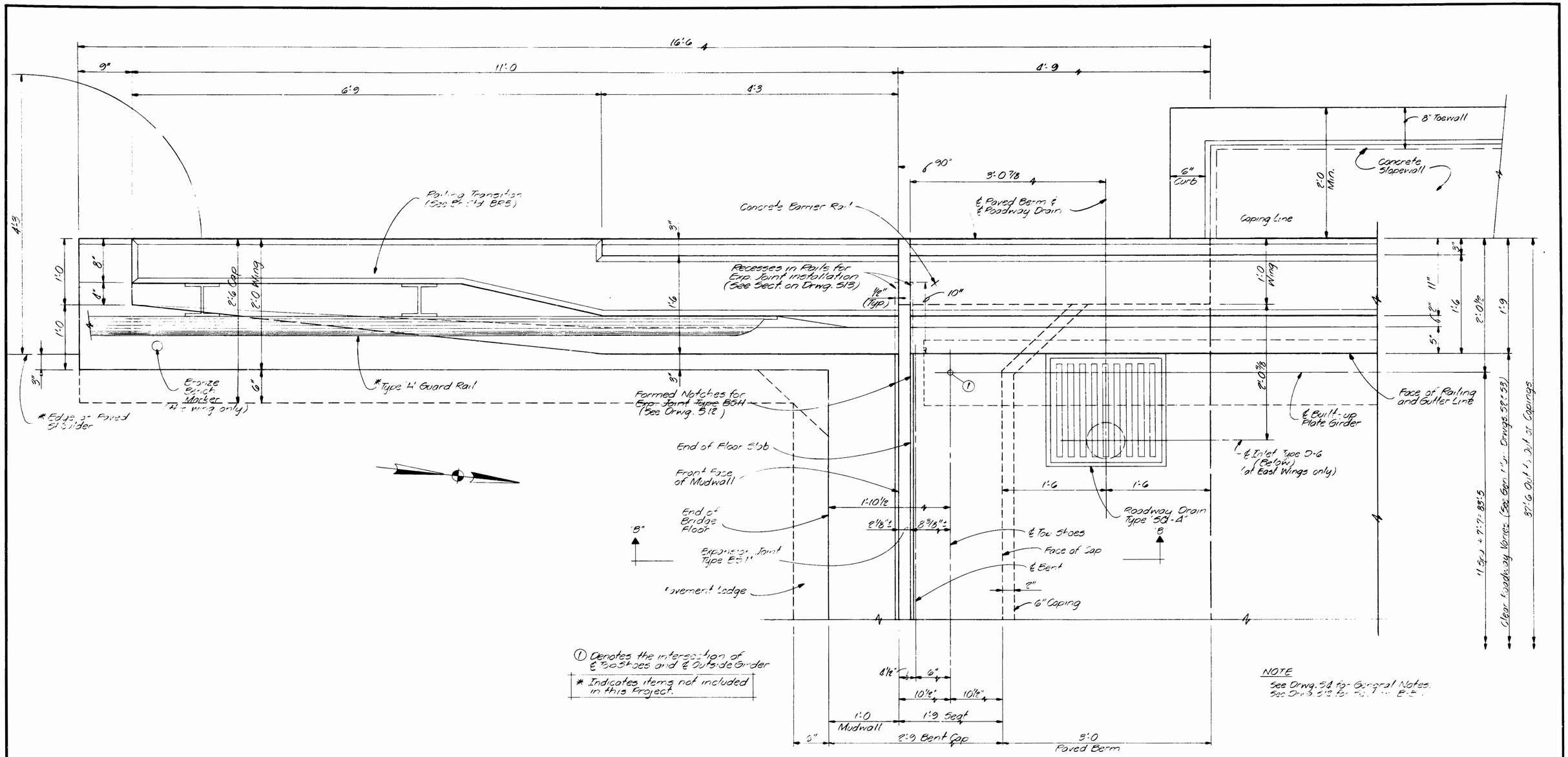

① Denotes the intersection of ℄ Top Shoes and ℄ Outside Girder

* Indicates items not included in this Project.

NOTE

See Drwg. 5A for General Notes.
See Drwg. 5B for Sect. & Det.

PLAN
(SOUTHWEST CORNER SHOWN)
(OTHER CORNERS SIMILAR)
Scale: 1/4" = 1'-0

Revised 12-15-87 Shoulder Dimension, Added Recess Note at Joint and Slopewall Curb Dimensions

CORNER DETAIL

INDIANA DEPARTMENT OF HIGHWAYS

ALLEN COUNTY

SCALE:- AS NOTED DATE:- MARCH 5, 1955

SUBMITTED FOR APPROVAL: Robert L. Sewell

DRAWING:- 5-11 OF 15 SHEET:- 17 OF 51

PROJECT:- [illegible]

CONTRACT NO. R-17483

BRIDGE FILE:- [illegible]

DESIGNED T. Boyd C'KD R. Smith
DRAWN T. Boyd C'KD C. Miller
TRACED C'KD

TP118

#2058/1356

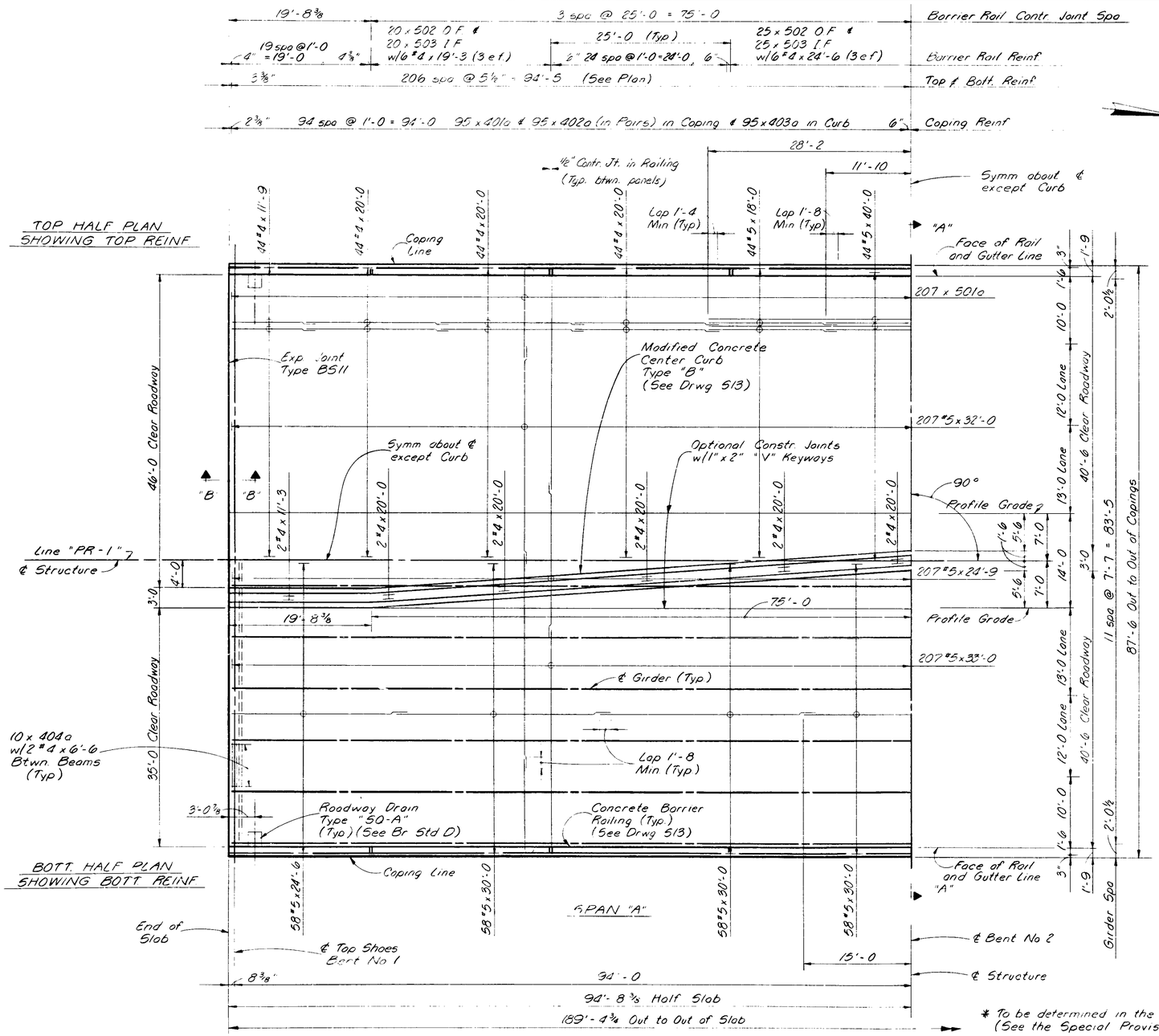

HALF PLAN
Scale 1/8" = 1'-0
SPAN "A" (Shown)
SPAN "B" (Rotate 180°)

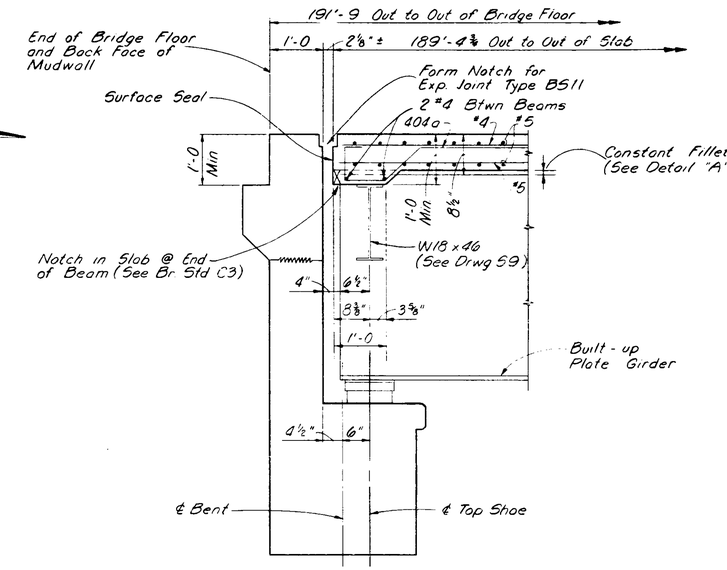

Note: Top of Jacking Frame to be set to maintain a minimum slab depth of 1'-0. Upper portion of Mudwall to be poured with or after the Floor Slab.

SECTION "B-B"
Scale 3/8" = 1'-0

Notes:

After Structural Steel has been erected, concrete forms shall not be blocked against the expansion end of steel in making any pours adjacent to steel spans.

The Top reinforcing in the slab shall be securely tied down to slab forms and/or the Girders to prevent lifting during concrete placement.

The Contractor will have the option of using permanent metal forms for the concrete bridge deck in lieu of removal forms in this Contract. See Special Provisions.

Surface Seal the Bridge Deck, Center Curb and Barrier Railings as shown.

All Reinforcing Steel in the Floor Slab, Center Curb and Barrier Railings shall be Epoxy Coated.

NOTES
See Drwg. 54 for General Notes.
See Drwg. 511 for Corner Details.
See Drwg. 513 for Section "A-A", Sequence of Pours, Bar Bending Details and Bill of Materials.
See Drwgs. 515 & 516 for Screed Elevations.
See Bridge Standard C1 for Reinforcing Bar Notes.

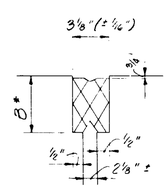

EXP. JOINT TYPE BS11
Not to Scale

FLOOR DETAILS

INDIANA DEPARTMENT OF HIGHWAYS

ALLEN COUNTY

SCALE:- AS NOTED DATE:- MARCH 5, 1985

SUBMITTED FOR APPROVAL: _____

DRAWING:- 512 OF 15 SHEET:- 18 OF 51
PROJECT:- F-170-1(12)
CONTRACT NO. R-17453
BRIDGE FILE:- 1-02-6950

DESIGNED: J. Brund CKD. R. Smith
DRAWN: L. Parsons CKD. D. Miller
TRACED: _____ CKD. _____

#2052/1986

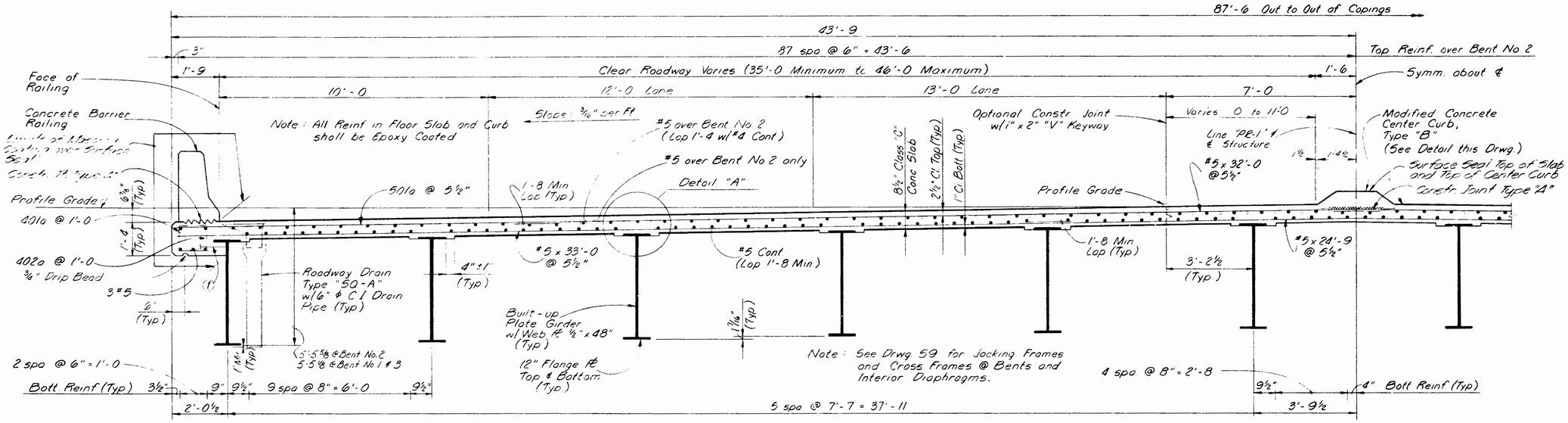

HALF - SECTION "A-A"
Scale: ½" = 1'-0

① Welded Studs spa. @ 2'-0 ctrs. max. w/¾" ϕ x 0'-6" Threaded Stud w/nut (Typ.) (A-¾" ϕ x 0'-6" Headed Stud may be used at the Contractors option) (See Detail on Drwg. 58)

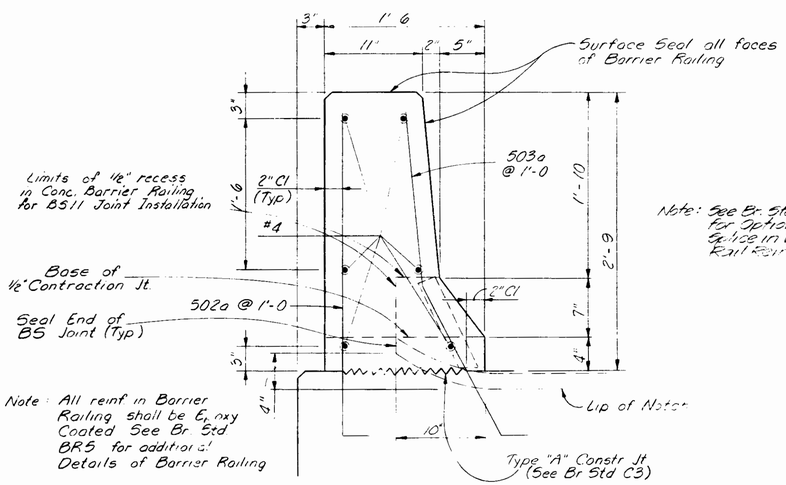

TYPICAL BARRIER RAILING SECTION
Scale: 1½" = 1'-0

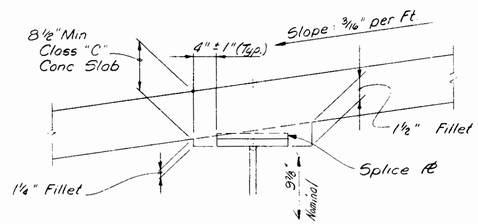

DETAIL "A"
Not to Scale

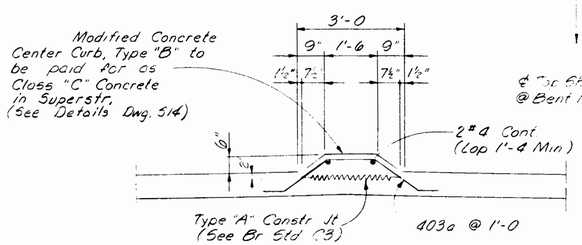

CURB DETAIL
Scale: ½" = 1'-0

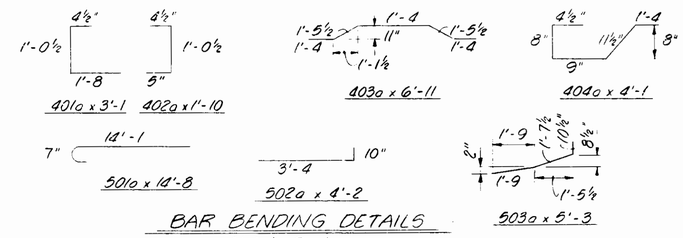

BAR BENDING DETAILS
Not to Scale

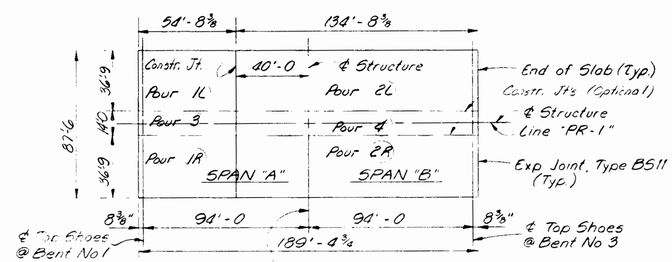

SEQUENCE OF POURS
Not to Scale

Note:
Sequence of Pours to be made in order of Pour numbers.
All Superstructure Construction Joints are Optional and Pours may be continuous provided the Pour terminates at a Construction Joint indicated on the Plans
The Contractor may change the width of Pours, Sequence of Pours, location of Construction Joints or eliminate longitudinal Construction Joints subject to the approval of the Engineer

BILL OF MATERIALS
SUPERSTRUCTURE
SPANS "A" & "B"

REINFORCING STEEL

Mark or Size	No. of Bars	Length (Ft.)	Weight (Lbs.)
501a	826	14'-8	
502a	380	4'-2	
503a	380	5'-3	
#5	176	40'-0	
#5	826	33'-0	
#5	826	32'-0	
#5	380	30'-0	
#5	413	24'-9	
#5	232	24'-6	
#5	176	18'-0	
Total #5 (Epoxy Coated)			117,751
401a	380	3'-1	
402a	380	1'-10	
403a	190	6'-11	
404a	220	4'-1	
#4	72	24'-6	
#4	546	20'-0	
#4	24	19'-3	
#4	176	11'-9	
#4	4	11'-3	
#4	44	6'-6	
Total #4 (Epoxy Coated)			13,110
Total Steel (Epoxy Coated)			130,861

CONCRETE

Pour No. 1 L	57.0 Cys.
Pour No. 1 R	57.0 Cys.
Pour No. 2 L	139.2 Cys.
Pour No. 2 R	139.2 Cys.
Pour No. 3	28.1 Cys.
Pour No. 4	56.2 Cys.
Total Class "C" in Superstr.	471.7 Cys.
Class "C" Concrete Railing	49.3 Cys.

MISCELLANEOUS

4-C.I Roadway Drains, Type "SQ-A" @ 192 Lbs Ea.	768 Lbs
4-6" ϕ C.I Drain Pipe w/ Single Hub x 4'-0 Lg @ 77 Lbs Ea	308 Lbs
Exp Joint, Type BS11	183 Lft.
Surface Seal	19,975 Sft.
Masonry Coating	9857 Sft.

NOTES
See Drwg. 54 for General Notes.
See Br. Std. Sta-Sta-J C1 for Reinforcing Bar Notes.

FLOOR DETAILS
INDIANA DEPARTMENT OF HIGHWAYS
ALLEN COUNTY

SCALE:- AS NOTED
DATE:- March 5, 1985
SUBMITTED FOR APPROVAL: Robert L. Smith

DRAWING: 5 of 15 SHEET: 13 OF 41
PROJECT:- F-170-1(12)
CONTRACT NO R-17483
BRIDGE FILE:- 1-02-6950

DESIGNED J. Brand CKD. R. Smith
DRAWN L. Parsons CKD. D. Miller
TRACED CKD.

Revised 12-15-87 Added Optional Rail Reinf. Splice Note & Masonry Coating

#2052/1956

LINE	DESCRIPTION	1	2	3	4	5	6	7	8	9	10	11	12	13	14	15	16	17	18	19	20
A	Elevation Top of Coping	816.260	816.305	816.350	816.385	816.415	816.450	816.470	816.485	816.500	816.505	816.505	816.500	816.495	816.485	816.470	816.455	816.445	816.430	816.420	816.410
	Elevation Top of Girder																				
	Distance T/Girder to T/Coping																				
B	Elevation Top of Screed	816.440	816.485	816.530	816.565	816.600	816.630	816.650	816.670	816.680	816.690	816.690	816.685	816.680	816.670	816.655	816.640	816.625	816.615	816.605	816.595
	Elevation Top of Girder																				
	Distance T/Girder to T/Screed																				
C	Elevation Top of Screed	816.630	816.675	816.715	816.755	816.790	816.815	816.840	816.855	816.870	816.875	816.875	816.875	816.865	816.855	816.840	816.830	816.815	[illegible]	[illegible]	[illegible]
	Elevation Top of Girder																				
	Distance T/Girder to T/Screed																				
D	Elevation Top of Screed	816.835	816.880	816.920	816.955	816.990	817.020	817.045	817.060	817.070	[illegible]	817.080	817.075	817.070	[illegible]	[illegible]	817.033	[illegible]	817.005	[illegible]	[illegible]
	Elevation Top of Girder																				
	Distance T/Girder to T/Screed																				
E	Elevation Top of Screed	816.940	816.985	817.030	817.065	817.100	817.130	817.150	817.170	817.180	817.190	817.190	817.185	817.180	817.170	817.155	~~817.140~~	~~817.125~~	~~817.105~~	~~817.095~~	~~817.085~~
	Elevation Top of Girder																				
	Distance T/Girder to T/Screed																				
F	Elevation Top of Screed	816.935	816.980	816.920	816.955	816.990	817.020	[illegible]	[illegible]	817.070	817.080	817.080	817.075	817.070	817.060	817.045	817.030	817.020	817.005	816.995	[illegible]
	Elevation Top of Girder																				
	Distance T/Girder to T/Screed																				
G	Elevation Top of Screed	816.630	816.675	816.715	816.755	816.790	816.815	816.840	816.855	816.870	816.875	816.875	816.875	816.865	816.855	816.840	816.830	816.815	816.800	816.790	816.785
	Elevation Top of Girder																				
	Distance T/Girder to T/Screed																				
H	Elevation Top of Screed	816.440	816.485	816.530	816.565	816.600	816.630	816.650	816.670	816.680	816.690	816.690	816.685	816.680	816.670	816.655	816.640	[illegible]	816.615	816.605	816.595
	Elevation Top of Girder																				
	Distance T/Girder to T/Screed																				
J	Elevation Top of Coping	816.260	816.305	816.350	816.385	816.415	816.450	816.470	816.485	816.500	816.505	816.505	816.500	816.495	816.485	816.470	816.455	816.445	816.430	816.420	816.410
	Elevation Top of Girder																				
	Distance T/Girder to T/Coping																				

LINE	DESCRIPTION	21	22	23	24	25	26	27	28	29	30	31	32	33	34	35	36	37	38	39
A	Elevation Top of Coping	816.410	816.405	816.405	816.405	816.410	816.410	816.405	816.400	816.390	816.375	816.355	816.330	816.300	816.265	816.225	816.175	816.125	816.070	816.015
	Elevation Top of Girder																			
	Distance T/Girder to T/Coping																			
B	Elevation Top of Screed	816.590	816.590	816.590	816.590	816.590	816.590	816.590	816.585	816.575	816.560	816.540	816.515	816.485	816.450	816.405	816.360	816.310	816.255	816.195
	Elevation Top of Girder																			
	Distance T/Girder to T/Screed																			
C	Elevation Top of Screed	816.740	816.775	816.780	816.780	816.780	816.780	[illegible]	816.770	816.760	816.745	816.730	816.705	816.670	816.635	816.595	816.550	816.495	816.445	816.385
	Elevation Top of Girder																			
	Distance T/Girder to T/Screed																			
D	Elevation Top of Screed	[illegible]	[illegible]	[illegible]	816.980	816.985	816.985	816.980	816.975	816.965	816.950	816.930	816.905	816.875	816.840	816.800	816.750	816.700	816.645	816.590
	Elevation Top of Girder																			
	Distance T/Girder to T/Screed																			
E	Elevation Top of Screed	~~817.060~~	~~817.030~~	817.030	817.030	817.030	817.030	817.030	817.085	817.075	[illegible]	817.040	817.015	816.955	816.930	816.905	816.860	816.810	816.755	816.675
	Elevation Top of Girder																			
	Distance T/Girder to T/Screed																			
F	Elevation Top of Screed	[illegible]	[illegible]	[illegible]	[illegible]	816.985	816.985	816.980	816.975	816.965	816.950	816.930	816.905	816.875	816.840	816.800	816.750	816.700	816.645	816.590
	Elevation Top of Girder																			
	Distance T/Girder to T/Screed																			
G	Elevation Top of Screed	816.780	816.775	816.780	816.780	816.780	816.780	816.775	816.770	816.760	816.745	816.730	816.705	816.670	816.635	816.595	816.550	816.495	816.445	816.385
	Elevation Top of Girder																			
	Distance T/Girder to T/Screed																			
H	Elevation Top of Screed	816.590	816.590	816.590	816.590	816.590	816.590	816.590	816.585	816.575	816.560	816.540	816.515	816.485	816.450	816.405	816.360	816.310	816.255	816.195
	Elevation Top of Girder																			
	Distance T/Girder to T/Screed																			
J	Elevation Top of Coping	816.410	816.405	816.405	816.405	816.410	816.410	816.405	816.400	816.390	816.375	816.355	816.330	816.300	816.265	816.225	816.175	816.125	816.070	816.015
	Elevation Top of Girder																			
	Distance T/Girder to T/Coping																			

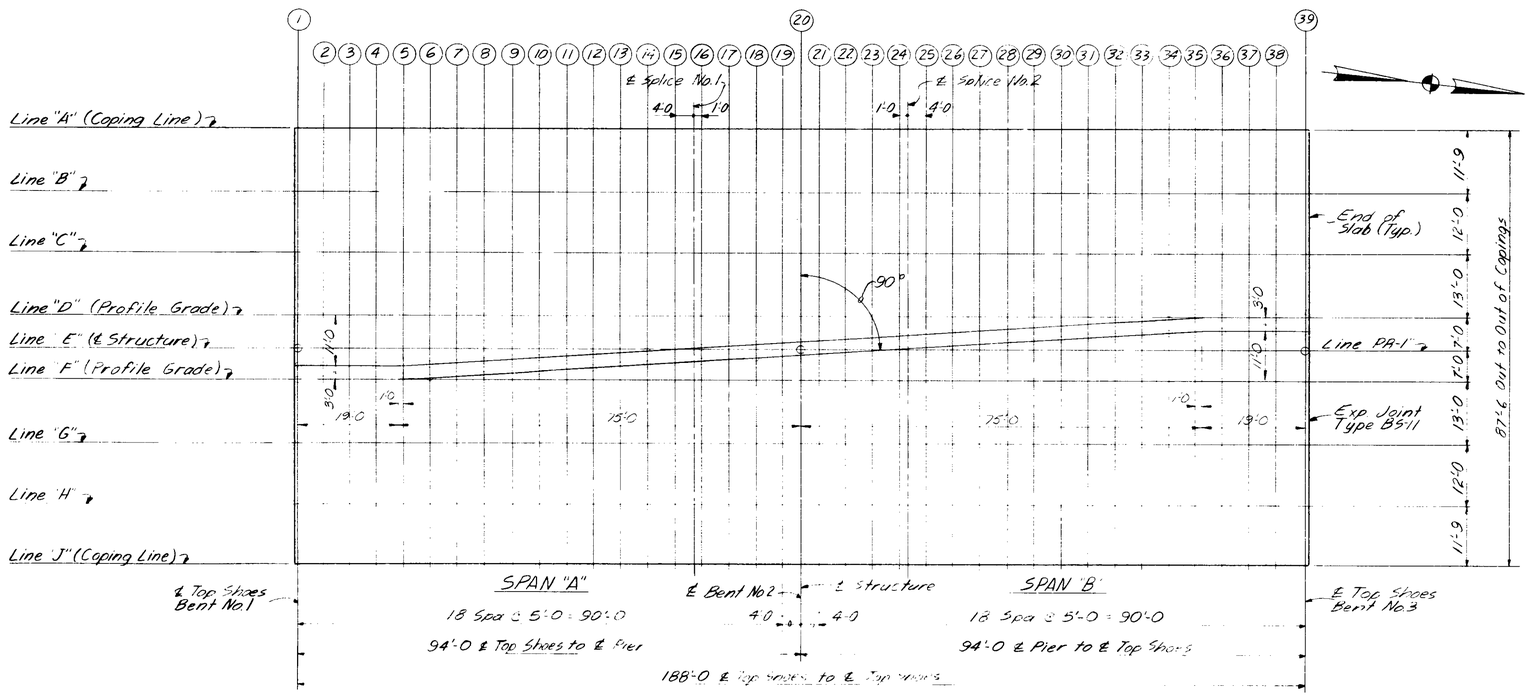

SCREED PLAN
Not to Scale

Note: Screed Elevations for center curb will be furnished upon request.

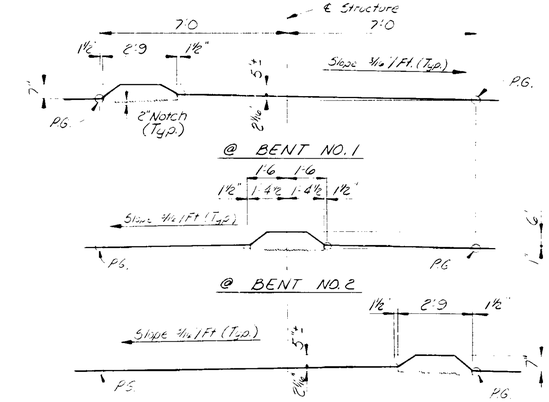

CENTER CURB DETAILS
Scale: 1/2" = 1'-0"

NOTES:
See Dwg. S4 for General Notes
See Dwg. S15 for Typical Section, Screed Notes and Concrete Dead Load Deflection Diagram.

SCREED ELEVATIONS

INDIANA DEPARTMENT OF HIGHWAYS
ALLEN COUNTY

SCALE:- NONE
DATE:- March 5, 1985
SUBMITTED FOR APPROVAL

DRAWING:- S14 OF 15 SHEET:- 20 OF 21
PROJECT:- F-170-1(12)
CONTRACT NO. R-17483
BRIDGE FILE:- 1-02-6950

DESIGNED J. Brand CKD. H. Smith
DRAWN C. Cutler CKD. D. Miller
TRACED C. Cutler CKD. D. Miller

TP118

#2058/1356

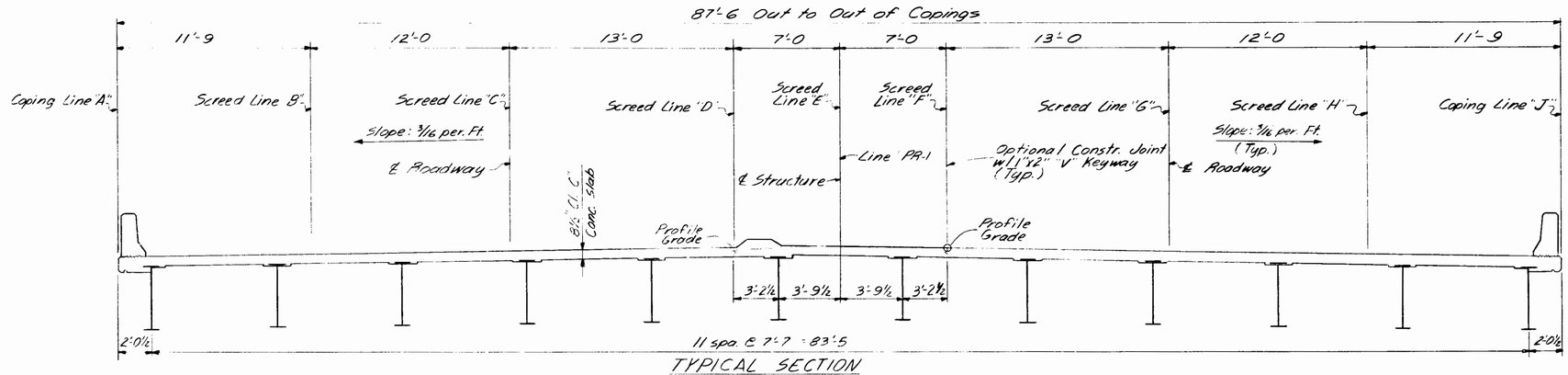

TYPICAL SECTION

Scale: ¼" = 1'-0

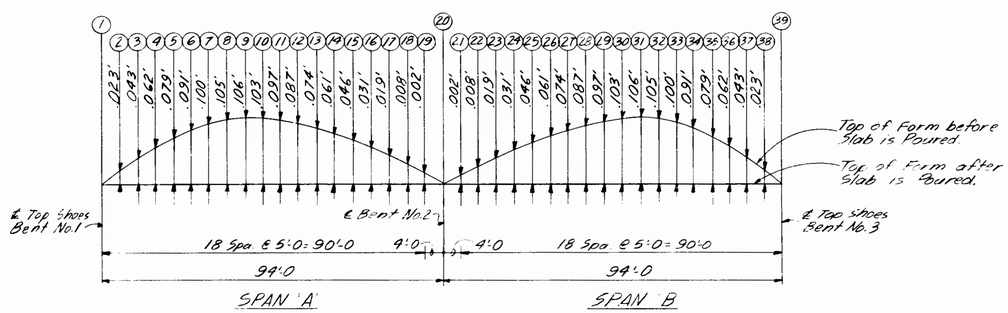

CONCRETE DEAD LOAD DEFLECTION DIAGRAM

Not to Scale

SCREED NOTES

Screed Table elevations show data for setting Screeds and Coping Forms so that Class "C" Concrete Slab and Copings will be at the required elevations after all the Concrete has been Poured.

Take elevations at all Screed points on top of adjacent Girders, enter these elevations below the tabulated elevations in the Screed Table.

Subtract these elevations from the tabulated elevations and use the resulting dimensions as the height for setting the Screed or Coping Forms above that point. This dimension remains unchanged regardless of how much or what order the concrete is poured.

No Concrete is to be poured until the above operation is complete.

Do not set Screeds or Coping Forms by leveling.

NOTES

See Drwg. S4 for General Notes.
See Drwg. S14 for Screed Plan.

SCREED ELEVATIONS

INDIANA DEPARTMENT OF HIGHWAYS

ALLEN COUNTY

SCALE:- AS NOTED DATE:- March 5, 1985

SUBMITTED FOR APPROVAL: Robert L. Smith

DRAWING:- S15 OF 15 SHEET:- 21 OF 51

PROJECT:- F-170-1(12)

CONTRACT NO. R-17483

BRIDGE FILE:- 1-02-6950

DESIGNED	J. Brand	CKD	R. Smith
DRAWN	C. Carter	CKD	D. Miller
TRACED	C. Carter	CKD	D. Miller

TP118

#2082/1956

BRIDGE FILE

STRUCTURE QUANTITIES

ITEM	CONCRETE CLASS C SUPERSTR CU. YDS.	CONCRETE CLASS A SUBSTR CU. YDS.	CONCRETE CLASS B ABOVE FTG CU. YDS.	CONCRETE CLASS B IN FTG. CU. YDS.			CONCRETE RAILING CLASS C CU YDS.	CONCRETE RAILING CLASS C LIN. FT.	REINF. STEEL TOTAL LBS	STRUCT. STEEL *** LBS.	EPOXY COATED REINF STEEL LBS.	ANCHOR PLATES MK-AP EACH	PILES UNTREATED TIMBER NO	PILES UNTREATED TIMBER LIN. FT.	PILES TREATED TIMBER NO	PILES TREATED TIMBER LIN. FT.	PILES STEEL ENCASED CONC. NO	PILES STEEL ENCASED CONC. LIN.FT.	PILES STEEL H BEARING NO	PILES STEEL H BEARING LIN. FT.	CAST IRON DRAIN PIPE LBS.	CAST IRON, GRATES, BASINS, & FITTINGS LBS.	RAILING TYPE OR LIN. FT.	EXP JOINT TYPE 8511 LIN FT	EXP JOINT CLASS LIN FT	CONC. STR. MEMBERS BOX BEAMS TYPE SQ FT.	CONC. STR. MEMBERS I BEAM TYPE LIN. FT.			ELASTOMERIC BEARING PAD TYPE I EACH	BRIDGE DECK SURFACE SQ. YDS	ANCHOR BOLTS EACH	SURFACE SEAL * SQ. FT.	FINISHING AND CURING SQ. YD.	BLASTING AND CLEANING SQ. YD.		* MASONRY COATING SQ. FT.
SUBSTRUCTURE																																					
Bent No. 1		76.4					2.2		9718		1321						16	480											12			892				261	
Bent No. 2		45.9	18.5	94.4					27,502								38	1520														195				2016	
Bent No. 3		76.4					2.2		9718		1321						16	800											12			892				261	
SUPERSTRUCTURE																																					
Spans "A" and "B"	471.7						43.3			421,800	130,861										308	768		183								19,958				3857	
Reinf. Steel for Approach Structures																																					
Reinf. Steel for R.C. Bridge Approaches																																					
Reinf. Steel for Lip Gutter, Pvmt., Topers, etc.																																					
TOTALS	471.7	198.7	18.5	94.4			47.7		46,938	421,800	133,503						70	2800			308	768		183					24			21,937				6395	

* Estimated Quantity

BRIDGE FILE

APPROACH STRUCTURES

STRUCT. NO.	LOCATION	DESCRIPTION SIZE	DESCRIPTION KIND	LENGTH LIN. FT.	CONCR. CL. A IN STRS. CU. YDS.	REINF. STEEL LBS.	PIPE END SEC. EACH		REMARKS
42	Sta. 843+24.76 "PR-1"	6"φ	0.052" FBC PERF. CS	128					Located at back face of Bent No. 1 1- Delineator Post Req'd.
43	Sta. 843+29.26 "PR-1"	12"φ	0.064" FBCCS	126			1		1- Inlet, Type D-6, Req'd.
44	Sta. 843+12.51 "PR-1"	12"φ	0.064" FBCCS	126			1		1- Inlet, Type D-6, Req'd.
45	Sta. 843+17.01 "PR-1"	6"φ	0.052" FBC PERF. CS	128					Located at back face of Bent No. 3 1- Delineator Post Req'd.
				TOTALS					Total of Reinforcing Steel Carried to "Structure Quantities"

PAVED SIDE DITCH & SODDING SUMMARY

LT. OR RT.	STATION TO STATION	PAVED SIDE DITCH (LIN. FT.) TYPE	PAY LENGTH	NO. OF LUGS	PAY LENGTH	CUT OFF WALLS	PAY LENGTH	TOTAL PAY LENGTH	SODDING (SQ. YD.) FOR PSD	FOR DITCHES	SHOULDERS	OTHER	TOTAL SOD

APPROACH TABLE

LOCATION LT/RT	LOCATION STATION	DESCRIPTION	WIDTH FT.	RADII FT.	GRADE %	LENGTH FT.	DIST. BEYOND R/W FT.	EXCAVATION (CYS) CUT	EXCAVATION (CYS) FILL	BITUM SURFACE #/SQ.YD.	BITUM SURFACE TONS	BITUM BINDER #/SQ.YD.	BITUM BINDER TONS	BITUM BASE #/SQ.YD.	BITUM BASE TONS	COMP. AGG. BASE Depth (in)	COMP. AGG. BASE TONS

NOTES:
Weight of Spirals includes weight of 1½ extra turns top and bottom.
Spacers and 1½ turns at laps included in cost of Spiral.
*** The weight of structural steel is approximate only, and it shall be the Contractor's responsibility to determine the weight on which he bases his bid.
For Test Bor Samples See Bridge Standard C1.

SUMMARIZED D. Miller C'K'D. R. Smith
TRACED T. Brattain C'K'D. D. Miller

REVISIONS

DATE	ITEM
12-15-87	Added Masonry Coating and Revised 6"φ 15" Pipes

BRIDGE SUMMARY
INDIANA DEPARTMENT OF HIGHWAYS
ALLEN COUNTY

DATE March 5, 1985

SUBMITTED FOR APPROVAL: Robert E. Smith

SHEET 11 OF 21

PROJECT: F-170-1(2)
CONTRACT NO: R-17483
BRIDGE FILE: 1-02-6950

TP103

#2052/1356

STRUCTURE PAY ITEMS

CODE NO.	DESCRIPTION	UNIT	STRUCTURE		TOTAL QUANTITY
51002	CONCRETE CLASS C IN [illegible]	[illegible]			471.7
51006	CONCRETE, CLASS A IN SUPERSTRUCTURE	[illegible]			
[illegible]	CONCRETE, CLASS A IN SUBSTRUCTURE	[illegible]			198.7
[illegible]	CONCRETE, CLASS C [illegible]	[illegible]			18.5
[illegible]	CONCRETE, [illegible]	[illegible]			94.4
[illegible]	[illegible]	LFT.			
[illegible]	[illegible] MEMBERS	[illegible]			
[illegible]	[illegible] STEEL	LBS.			46,938
[illegible]	EPOXY COATED REINF. STEEL	LBS.			133,503
[illegible]	STRUCTURAL STEEL	LBS.			
[illegible]	[illegible]	[illegible]			1
51090	[illegible]	[illegible]			
[illegible]	ANCHOR PLATES MF-AP 1	EACH			
[illegible]	ANCHOR PLATES MF-AP 2	EACH			
[illegible]	ANCHOR PLATES MF-AP 3	EACH			
[illegible]	ANCHOR PLATES,TYPE MF-AP 4	EACH			
	ANCHOR BOLTS	EACH			
[illegible]	TIE DOWN ASSEMBLY MF-TA	EACH			
51095	CAST IRON,DRAIN PIPE,4 IN.	LBS.			
51100	CAST IRON,DRAIN PIPE,6 IN.	LBS.			308
51105	CAST IRON,DRAIN PIPE,8 IN.	LBS.			
51110	CAST IRON, GRATES,BASIN AND FITTINGS	LBS.			768
51104	REMOVAL OF PRESENT RAILING	LFT.			
51132	RAILING RESET	LFT.			
51115	RAILING(TYPE 5 OR C)	LFT.			
51120	RAILING(TYPE 5A OR 2D)	LFT.			
[illegible]	RAILING(TYPE 6 or D)	LFT.			
51130	RAILING(TYPE 7 or E)	LFT.			
51020	CLASS C, CONCRETE RAILING	CYS.			47.7
51025	CLASS C, CONCRETE RAILING	LFT.			
51131	BARRIER RAILING TYPE X	LFT.			
[illegible]	CLASS X EXCAVATION	CYS.			
[illegible]	WET EXCAVATION	CYS.			
[illegible]	WATERWAY EXCAVATION	CYS.			
[illegible]	WATERWAY EXCAVATION	LSUM			
[illegible]	DRY EXCAVATION	CYS.			
51230	FOUNDATION EXCAVATION (UNCLASSIFIED)	CYS.			5
51814	PNEUMATICALLY PLACED MORTAR	SFT.			
51870	REPOINTING MASONRY IN STRS	SFT.			
[illegible]	WELDED STEEL WIRE FABRIC	SFT.			
51859	PAINTING OLD STEEL BRIDGE	LSUM			
[illegible]	EXPANSION JOINT,TYPE BS2	LFT.			
[illegible]	EXPANSION JOINT,TYPE BS6	LFT.			
[illegible]	EXPANSION JOINT,TYPE BS-	LFT.			
[illegible]	EXPANSION JOINT,TYPE BS8	LFT.			
51890	EXPANSION JOINT,TYPE [illegible]	LFT.			183
[illegible]	EXPANSION JOINT,CLASS S-S	LFT.			
[illegible]	EXPANSION JOINT,CLASS T-1	LFT.			
51574	OVERLAY DAM	SFT.			

STRUCTURE PAY ITEMS

CODE NO.	DESCRIPTION	UNIT	STRUCTURE		TOTAL QUANTITY
[illegible]	TIMBER PILES FURNISHED UNTREATED	LFT.			
[illegible]	TIMBER PILES DRIVEN, UNTREATED	LFT.			
[illegible]	TIMBER PILES FURN.TREATED	LFT.			
[illegible]	TIMBER PILES DRIV.TREATED	LFT.			
[illegible]	PILE SHELLS FURNISHED AND DRIVEN [illegible] INCH	LFT.			
[illegible]	PILE SHELLS FURNISHED AND DRIVEN(14 INCH)	LFT.			2800
[illegible]	STEEL H PILES FURNISHED AND DRIVEN [illegible]	LFT.			
[illegible]	STEEL H PILES FURNISHED AND DRIVEN [illegible]	LFT.			
[illegible]	STEEL H PILES FURNISHED AND DRIVEN 12 BP 53	LFT.			
[illegible]	PILE ENCASEMENT CONCRETE	LFT.			
[illegible]	REMOVAL OF PRESENT STR. (PORTIONS)	LSUM			
[illegible]	REMOVAL OF PRESENT STR.	LSUM			
[illegible]	TEMPORARY BRIDGE AND APPR.	LSUM			
[illegible]	CONCRETE SLOPEWALL 5 INCH	SYS.			
06455	SLOPEWALL	SYS.			752
[illegible]	RIPRAP	SYS.			
[illegible]	REVETMENT RIPRAP	TON			
[illegible]	HANDLAID RIPRAP 12 INCH	SYS.			
[illegible]	DUMPED RIPRAP	TON			
[illegible]	PLASTIC FILTER CLOTH	SYS.			
[illegible]	STEEL DRAIN PIPE(6 INCH)	LSUM			
[illegible]	STEEL DRAIN PIPE([illegible] INCH)	LSUM			
[illegible]	STEEL PIPE CONDUIT(2 INCH)	LFT.			
[illegible]	RIVETS REMOVED	EACH			
[illegible]	FIELD DRILLED HOLES	EACH			
[illegible]	STRUCTURAL STEEL CUTTING	SIN			
[illegible]	FIELD DRILLED HOLES IN CONCRETE	EACH			
* 51821	SURFACE SEAL	LSUM			1
⊛	MASONRY COATING	LSUM			1
51842	BRIDGE DECK OVERLAY	SYS.			
51845	BRIDGE DECK SURFACE	SYS.			
51843	BRIDGE DECK PATCHING	SFT.			
51833	CONCRETE SCARIFYING	SYS.			
51840	ADDITIONAL CONC SCARIFYING	SYS.			
51837	BLASTING AND CLEANING	SYS.			
51838	FINISHING AND CURING	SYS.			
	ELASTOMERIC BEARING ASSEMBLY, TYPE I	EACH			24

* Total Estimated Quantity = 21,937 Sft.
⊛ Total Estimated Quantity = 6395 Sft.

APPROACH PAY ITEMS

CODE NO.	DESCRIPTION	UNIT	STRUCTURE		TOTAL QUANTITY
02045	EXCAVATION FOR SUBGRADE TREATMENT	CYS.			
[illegible]	UNCLASSIFIED EXCAVATION	CYS.			
⊛ 02000	COMMON EXCAVATION	CYS.			200
[illegible]	BORROW	CYS.			94275
[illegible]	B BORROW	CYS.			
02060	B BORROW FOR STRUCTURE BACKFILL	CYS.			307
[illegible]	REMOVAL OF PAVEMENT	SYS.			
[illegible]	BREAKING PAVEMENT	SYS.			
52490	TERMINAL JOINT	LFT.			
52495	CONTRACTION JOINT,TYPE D-1	LFT.			
52280	CONC PAVEMENT REINFORCED (7 INCH)	SYS.			
52285	CONC PAVEMENT REINFORCED (8 INCH)	SYS.			
52290	CONC PAVEMENT REINFORCED (9 INCH)	SYS.			
52300	CONC PAVEMENT REINFORCED (10 INCH)	SYS.			
06070	CONCRETE SIDEWALK	SYS.			
52305	TYPE P COMPACTED AGGREGATE FOR BASE (SIZE NO. [illegible])	TON			
52605	AGGREGATE FOR SHOULDER DRAINS	TON			
52610	AGGREGATE FOR UNDER DRAINS	CYS.			
52308	TYPE O COMPACTED AGGREGATE FOR BASE (SIZE NO. 53)	TON			
52310	SUBBASE	CYS.			
52315	BITUM.STABILIZED SUBBASE TYPE I, II, OR III	TON			
52320	BITUM. STABILIZED SUBBASE	TON			
52445	BITUMINOUS BASE	TON			
04260	BITUMINOUS BASE (TYPE 5D)	TON			
52451	BITUMINOUS BINDER	TON			
52450	BITUMINOUS SURFACE	TON			
52456	BITUMINOUS MATERIAL FOR TACK COAT	SYS.			
52461	BITUMINOUS MATERIAL FOR PRIME COAT	SYS.			
04351	SEAL COAT TYPE 5	SYS.			
04348	SEAL COAT TYPE 2	SYS.			
52470	BITUMINOUS MIXTURE FOR APPROACHES	TON			
52475	BITUMINOUS MIXTURE FOR SHOULDER	TON			
52500	GUARD RAIL, TYPE A	LFT.			
52505	GUARD RAIL, TYPE B	LFT.			
52510	GUARD RAIL, TYPE C	LFT.			
52515	GUARD RAIL, TYPE D	LFT.			
52520	GUARD RAIL, TYPE E	LFT.			
52525	GUARD RAIL, TYPE F	LFT.			
52530	GUARD RAIL, TYPE G	LFT.			
52531	GUARD RAIL, TYPE H	LFT.			
52537	GUARD RAIL END TREATMENT	EACH			
06035	RESET GUARD RAIL	LFT.			
52535	REMOVAL OF GUARD RAIL	LFT.			
06574	SODDING	SYS.			2560
52381	SODDING (NURSERY)	SYS.			
52385	MULCHED SEEDING "R"	SYS.			
06560	MULCHED SEEDING "U"	SYS.			
52392	MULCHED SEEDING(LEGUMES)	SYS.			
	SEED MIXTURE "P"	LBS.			55
	SEED MIXTURE "R"	LBS.			360
52398	SEED MIXTURE "CU"	LBS.			
[illegible]	SEED MIXTURE (GRASS)	LBS.			
06565	MULCHING MATERIAL	TON			7.2
52401	MULCHING MATERIAL (WOOD CELLULOSE FIBER)	TON			
06545	FERTILIZER	TON			1.7
06567	WATER	M.G.			11
06540	AGRICULTURAL LIMESTONE	TON			2.3

⊛ Undistributed Quantity

APPROACH PAY ITEMS

CODE NO.	DESCRIPTION	UNIT	STRUCTURE		TOTAL QUANTITY
07025	PIPE:GR.A(0.064"FBCCS) 12"	LFT.			
07075	PIPE:GR.A(0.064"FBCCS) 15"	LFT.			
07125	PIPE:GR.A(0.064"FBCCS) 18"	LFT.			
07175	PIPE:GR.A(0.064"FBCCS) 24"	LFT.			
07225	PIPE:GR.A(0.064"FBCCS) 30"	LFT.			
07275	PIPE:GR.A(0.064"FBCCS) 36"	LFT.			
07325	PIPE:GR.A(0.064"FBCCS) 42"	LFT.			
[illegible]	PIPE:GR.D(0.064"CS) 12"	LFT.			
[illegible]	PIPE:GR.D(0.064"CS) 15"	LFT.			
[illegible]	PIPE:GR.D(0.064"CS) 18"	LFT.			
[illegible]	PIPE:GR.D(0.064"CS) 24"	LFT.			
[illegible]	PIPE:GR.D(0.064"CS) 30"	LFT.			
[illegible]	PIPE:GR.D(0.064"CS) 36"	LFT.			
10150	PIPE:GR.D(0.064"CS) 42"	LFT.			
34000	PIPE:0.052"FBC PERF.CS 6"	LFT			256
[illegible]	PIPE:0.064"FBCCS 12"	LFT.			252
[illegible]	CONC.CLASS A IN STRUCTURE	CYS.			
52376	CONC.CLASS C IN STRUCTURE	CYS.			
46000	PIPE END SECTION 12"	EACH			2
46005	PIPE END SECTION 15"	EACH			
46010	PIPE END SECTION 18"	EACH			
[illegible]	PIPE END SECTION 21"	EACH			
46020	PIPE END SECTION 24"	EACH			
46025	PIPE END SECTION 27"	EACH			
46030	PIPE END SECTION 30"	EACH			
46035	PIPE END SECTION 33"	EACH			
46040	PIPE END SECTION 36"	EACH			
45000	INLET,TYPE A-1	EACH			
45025	INLET,TYPE D-6	EACH			2
45030	INLET,TYPE E-7	EACH			
[illegible]	INLET,TYPE P-12A	EACH			
06335	PAVED SIDE DITCH,TYPE A	LFT.			
06340	PAVED SIDE DITCH,TYPE B	LFT.			
06345	PAVED SIDE DITCH,TYPE C	LFT.			
06350	PAVED SIDE DITCH,TYPE D	LFT.			
06355	PAVED SIDE DITCH,TYPE E	LFT.			
06360	PAVED SIDE DITCH,TYPE F	LFT.			
06365	PAVED SIDE DITCH,TYPE G	LFT.			
52831	DRILLED HOLES FOR MUDJACKING	EACH			
52830	MATERIAL FOR MUDJACKING	CYS.			
99660	DO NOT SPRAY SIGNS	EACH			
	MOBILIZATION AND DEMOBILIZATION FOR SEEDING	EACH			

APPROACH PAY ITEMS

CODE NO.	DESCRIPTION	UNIT	STRUCTURE		TOTAL QUANTITY
06040	47"FENCE,F,FIELD	LFT.			
06145	48"FENCE,CHAIN LINK	LFT.			
06640	CONSTRUCTION SIGNS,TYPE A	EACH			12
06645	CONSTRUCTION SIGNS,TYPE B	EACH			4
[illegible]	CON.BARRICADES,TYPE III-A)	EACH			
[illegible]	MAINTAINING TRAFFIC	LSUM			
[illegible]	STOP SIGN,TYPE R-1A	EACH			
[illegible]	DO NOT PASS SIGN, TYPE R-11-A	EACH			
06655	YIELD SIGN,TYPE R-301	EACH			
[illegible]	PASS WITH CARE SIGN, TYPE R-12A	EACH			
[illegible]	CURVE SIGN,TYPE W-2AR	EACH			
[illegible]	CURVE SIGN,TYPE W-2AL	EACH			
[illegible]	REVERSE CURVE SIGN, TYPE W-4AR	EACH			
[illegible]	REVERSE CURVE SIGN, TYPE W-4AL	EACH			
[illegible]	LARGE ARROW SIGN, TYPE W-11A	EACH			
[illegible]	STOP AHEAD SIGN,TYPE W-13A	EACH			
[illegible]	DELINEATOR WITH POST, TYPE D-1, [illegible] INCH	EACH			
[illegible]	DELINEATOR WITH POST, TYPE D-2, [illegible] INCH	EACH			
[illegible]	FLEXIBLE DELINEATORS	EACH			
[illegible]	DELINEATOR POST	EACH			2
[illegible]	FLEXIBLE DELINEATOR POST	EACH			
52366	TEMPORARY PAVEMENT MARKING TAPE	LFT.			
[illegible]	TEMPORARY PAVEMENT MARKING PAINT	LFT.			
52360	RIGHT-OF-WAY MARKERS	EACH			
[illegible]	MONUMENT,TYPE A	EACH			
[illegible]	MONUMENT,TYPE B	EACH			
06510	MONUMENT,TYPE C	EACH			
06513	MONUMENT,TYPE D	EACH			
	WIDE ANGLE REFLECTORS	EACH			22
[illegible]	FLASHING ARROW SIGN	WKS.			
[illegible]	LINE,SOLID,WHITE, 4"	LFT.			
[illegible]	LINE,SOLID,YELLOW, 4"	LFT.			
06702	THERMOPLASTIC LINE,SKIP WHITE, 5"	LFT.			
06711	LINE,SKIP,WHITE, 4"	LFT.			
06712	LINE,SKIP,YELLOW, 4"	LFT.			
06716	REMOVAL OF LINE,SOLID, WHITE, 4"	LFT.			
06717	REMOVAL OF LINE,SOLID, YELLOW 4"	LFT.			
06718	REMOVAL OF LINE,SKIP, WHITE 4"	LFT.			
90900	REMOVAL OF LINE,SKIP, YELLOW 4"	LFT.			
[illegible]	REMOVAL OF THERMOPLASTIC LINE,SKIP,WHITE 5"	LFT.			
52536	TEMPORARY CONC. BARRIER	LFT.			
52819	TEMPORARY CROSSOVER TYPE "B"	EACH			

REVISIONS

DATE	ITEM
12-15-87	Added Masonry Coating, Revised Borrow, Seed Mix "R", Barricade III-A and 6" & 12" Pipes and Mob & Demob for Seeding
2-25-88	ELASTOMERIC BEARING PAD DELETED; ELASTOMERIC BEARING ASSEMBLY, WIDE ANGLE REFLECTORS ADDED

SUMMARIZED D.Miller   CKD R.Smith
TRACED T.Brattain   CKD D.Miller

MARCH 1982

BRIDGE ESTIMATE OF QUANTITIES

INDIANA DEPARTMENT OF HIGHWAYS

ALLEN COUNTY

DATE March 5, 1985

SUBMITTED FOR APPROVAL: [signature]

PROJECT F-170-1-(2)
CONTRACT NO R-17483
BRIDGE FILE 1-02-6950

SHEET [illegible] OF [illegible]

#2052/1356